REGIONAL FACILITY PLAN UPDATE

FOR THE

HOPKINSVILLE WATER ENVIRONMENT
AUTHORITY

RELATED TO THE EXPANSION

OF THE

HAMMOND WOOD
WASTEWATER TREATMENT PLANT

JOB NUMBER 1983

JANUARY 2015

J. R. WAUFORD & COMPANY,
CONSULTING ENGINEERS, INC.
2835 Lebanon Road
Nashville, Tennessee 37214
Consultant

&

JV ENGINEERING, INC.
5100 Linbar Drive, Suite 106
Nashville, Tennessee 37211
Subconsultant

REGIONAL FACILITY PLAN UPDATE

FOR THE

HOPKINSVILLE WATER ENVIRONMENT
AUTHORITY

RELATED TO THE EXPANSION

OF THE

HAMMOND WOOD
WASTEWATER TREATMENT PLANT

STATE OF KENTUCKY
JAMES G. DAVENPORT
22752
02/12/15
LICENSED
PROFESSIONAL ENGINEER

JOB NUMBER 1983

JANUARY 2015

J. R. WAUFORD & COMPANY,
CONSULTING ENGINEERS, INC.
2835 Lebanon Road
Nashville, Tennessee 37214
Consultant

&

JV ENGINEERING, INC.
5100 Linbar Drive, Suite 106
Nashville, Tennessee 37211
Subconsultant

1983
January 2015

TABLE OF CONTENTS

REGIONAL FACILITY PLAN
HAMMOND WOOD WASTEWATER TREATMENT PLANT
HOPKINSVILLE WATER ENVIRONMENT AUTHORITY

	Description	Page No.
I.	Regional Facility Plan Summary	I-1 – I-5
II.	Statement of Purpose and Need	II-1 – II-3
III.	Physical Characteristics of the Planning Areas	III-1 – III-3
IV.	Socioeconomic Characteristics of the Planning Areas	IV-1 – IV-7
V.	Existing Environment in the Planning Areas	V-1 – V-7
VI.	Existing Wastewater System	VI-1 – VI-15
VII.	Forecasts of Flows and Waste Loads in the Planning Areas	VII-1 – VII-6
VIII.	Evaluation of Alternatives	VIII-1 – VIII-37
IX.	Cross Cutter Correspondence and Mitigation	IX-1 – IX-2
X.	Evaluation of Recommended Regional Facility Plan	X-1 – X-3
XI.	Documentation and Public Participation	XI-1
XII.	Regional Facility Plan Guidance	23 – 26

Tables

Table No.	Description	Page No.
IV-1	Census Data – Hopkinsville City and Christian County	IV-1
IV-2	Projected Population Data – Hopkinsville City and Christian County	IV-3
IV-3	Residential Sewer Customer Data – Hopkinsville and Pembroke	IV-5
IV-4	Commercial Sewer Customer Data – Hopkinsville and Pembroke	IV-5
IV-5	Future Residential, Commercial and Industrial Customers – Hopkinsville and Pembroke, Kentucky	IV-6
VI-1	Sewage Pipeline Inventory	VI-3
VI-2	Sewage Pumping Station Inventory	VI-5
VI-3	Hammond Wood WWTP Effluent Limitations KPDES Permit No. KY0066532	VI-14
VI-4	Hammond Wood WWTP Effluent Results September 2013 to August 2014	VI-15
VII-1	83rd Percentile Current Flow and Waste Load – Summer Hammond Wood WWTP	VII-2
VII-2	83rd Percentile Current Flow and Waste Load – Winter Hammond Wood WWTP	VII-2
VII-3	83rd Percentile Year 2035 Design Flows and Waste Loads Hammond Wood WWTP	VII-3
VII-4	Year 2014 Average Daily Water Sales	VII-4

VII-5	Year 2035 Forecast Industrial, Commercial and Residential Flows	VII-4
VII-6	Estimated Oak Grove WWTP and Megasite Flows	VII-5
VIII-1	Financial Alternative Analysis	VIII-36
VIII-2	Non-Financial Alternative Analysis	VIII-37

Figures

Figure No.	Description
VIII-1	Hammond Wood WWTP Proposed Flow Diagram
VIII-2	Headworks Top Plan
VIII-3	Blower Building Schematic

Cost Estimates

Estimate No.	Description	Page No.
1	Alternative No. 1 – Oxidation Ditches and Discharge to Little River – Hammond Wood WWTP Expansion	CE-1
1A	Phase I – Alternative No. 1 – Oxidation Ditches and Discharge to Little River – Hammond Wood WWTP Expansion	CE-1A
1B	Phase II – Alternative No. 1 - Oxidation Ditches and Discharge to Little River – Hammond Wood WWTP Expansion	CE-1B
2	Alternative No. 2 – Oxidation Ditches and Discharge to Lake Barkley – Hammond Wood WWTP Expansion	CE-2
3	Alternative No. 3 – Sequencing Batch Reactor and Discharge to Little River – Hammond Wood WWTP Expansion	CE-3
	Biosolids Treatment & Disposal Alternatives	
B-1	Biosolids Alternative No. 1 – Gas Drying to Produce Class "A" Exceptional Quality Biosolids	CE – B-1
B-2	Biosolids Alternative No. 2 – ATAD to Produce Class "A" Exceptional Quality Biosolids	CE – B-2
B-3	Biosolids Alternative No. 3 – Solar Drying to Product Class "A" Exceptional Quality Biosolids	CE – B-3
B-4	Alternative No. 4 – Land Farming to Produce Class "B" Biosolids	CE – B-4

Appendices

Appendix A	Potential Methods to More Efficiently Transport Wastewater to Hammond Wood WWTP
Appendix B	Wet Weather Events Assessment / Infiltration-Inflow Reduction
Appendix C	Waste Allocation Letter from Kentucky Division of Water
Appendix D	Excerpt from 2012 303(d) List
Appendix E	Hammond Wood WWTP NPDES Permit No. KY0066532
Appendix F	Excerpt from 2012 Guidelines for Water Reuse
Appendix G	Cross Cutter Letter Responses
Appendix H	HWEA User Rates Effective July 1, 2014

Exhibits

Exhibit No. 1	Alternative No. 1 – Continued Discharge to North Fork Little River – Proposed Site Plan Hammond Wood WWTP
Exhibit No. 2	Alternative No. 2 – Discharge to Lake Barkley – Pipeline Plan Hammond Wood WWTP

Maps

Map No. 1	201 Facilities Boundary
Map No. 2	WWTP, SPS, RWI Location Map
Map No. 3	USGS Topo Map
Map No. 4	100 Year Flood Plain Map
Map No. 5	Local Planning and Zoning Map
Map No. 6.0	Wastewater System Key Map
Map No. 6.1	Wastewater System Map No. 1
Map No. 6.2	Wastewater System Map No. 2
Map No. 6.3	Wastewater System Map No. 3
Map No. 6.4	Wastewater System Map No. 4
Map No. 6.5	Wastewater System Map No. 5
Map No. 6.6	Wastewater System Map No. 6
Map No. 6.7	Wastewater System Map No. 7
Map No. 6.8	Wastewater System Map No. 8
Map No. 6.9	Wastewater System Map No. 9
Map No. 6.10	Wastewater System Map No. 10
Map No. 6.11	Wastewater System Map No. 11
Map No. 6.12	Wastewater System Map No. 12
Map No. 6.13	Wastewater System Map No. 13
Map No. 6.14	Wastewater System Map No. 14
Map No. 6.15	Wastewater System Map No. 15
Map No. 6.16	Wastewater System Map No. 16
Map No. 6.17	Wastewater System Map No. 17

****

HOPKINSVILLE WATER ENVIRONMENT AUTHORITY
REGIONAL FACILITY PLAN

I. Regional Facility Plan Summary

A. General

The City of Hopkinsville is located in Christian County in southwest Kentucky. According to the most recent census data from Kentucky State Data Center, the Year 2010 population of the City of Hopkinsville was 31,577 persons and the Year 2010 population of Christian County was 73,955 persons. Satellite cities of Hopkinsville consist of Crofton to the north, Pembroke to the east, and Oak Grove to the south. Another large population center to the south is the military post of Fort Campbell. The Hopkinsville Water Environment Authority (HWEA) provides sewer service to the cities of Hopkinsville, Crofton, Pembroke, and Oak Grove. Sewage emanating from the cities of Hopkinsville and Pembroke is treated by the Hammond Wood Wastewater Treatment Plant (Hammond Wood WWTP) which is owned and operated by the HWEA. Sewage emanating from the cities of Crofton and Oak Grove is treated by WWTPs located in each of those municipalities but owned and operated by the HWEA. As a result, there are three distinct planning areas; (1) Hopkinsville including Pembroke, (2) Oak Grove, and (3) Crofton.

B. Purpose and Major Problems Evaluated

This Regional Facility Plan is adjunct to the "*201 Facilities Plan Update"* dated September 2001 prepared for the HWEA by PDR Engineers, Inc. which was acquired by Tetra Tech. The primary objective of this Regional Facility Plan is to address the expansion of the Hammond Wood WWTP; secondary objectives include determining deficiencies in the HWEA sewage collection system that need to be addressed to comply with the

requirements of the Clean Water Act and subsequent federal and state regulations. Specific objectives are as follows:

- Evaluate the Hammond Wood WWTP facilities and assess the improvements needed for their continued performance and compliance with water quality objectives.
- Evaluate methods to more efficiently transport wastewater to the Hammond Wood WWTP.
- Determine methods to effectively address inflow and infiltration into the collection system.
- Evaluate methods to encourage the beneficial re-use of treated effluent from the Hammond Wood WWTP.
- Evaluate areas of the sewage collection system that require improvements to ensure adequate capacity.

The major problems identified as part of this plan include the following:

- Hammond Wood WWTP Capacity
- Problems at the Main Sewage Pumping Station in Pembroke

The following long term projects can be implemented as required and pose no immediate problems:

- Industrial Park Interceptor Sewer Capacity
- Need for Phase I Rock Bridge Interceptor Sewer
- Need for Phase II Rock Bridge Interceptor Sewer
- Dry Branch Interceptor Sewer Condition

This Regional Facility Plan is intended to serve as a guide or road map for the future for the HWEA. Specific schedules and individual project scopes are likely to be modified based upon regulatory deadlines, changes in wastewater system use, and information discovered after plan preparation. The ability of HWEA to fund projects may also impact the scope and timeline of individual projects.

C. Recommended Projects

1. Expand Hammond Wood WWTP

The solution to the capacity issues at the Hammond Wood WWTP is to implement Alternative No. 1 - Renovate and Expand the Existing Hammond Wood WWTP at an estimated cost of $35,250,000 as shown on Cost Estimate No. 1 and depicted at Exhibit No. 1. Implementation of Alternative No. 1 will result in implementation of the least costly alternative and also in the re-use of existing facilities at the existing Hammond Wood WWTP site at Gary Lane. The implementation of Alternative No. 1 is proposed to be financed with a loan from the Kentucky Division of Water Clean Water State Revolving Loan Fund.

The implementation timeline for this project consists of the preparation of plans and specifications from Spring of 2015 to Spring of 2016 and construction beginning in the Summer of 2016 and ending in the Summer of 2018. A rate increase will be required for this project which is described in Section X. Evaluation of Recommended Facility Plan.

2. Renovation of the Main Sewage Pumping Station (SPS) in Pembroke

This project consists of increasing the capacity of the Main SPS serving the Pembroke sewer system including a new wetwell, two new submersible pumps and controls at an estimated total project cost of $220,000. During the preliminary engineering phase, the existing 6-inch force main should be evaluated for replacement if the friction head becomes excessive. The maximum capacity of this line is estimated to be approximately 250 gpm. This project is designated for replacement in the next five years and will utilize in house cash resulting in no rate increase.

D. Additional Projects

The following projects are not immediately required and may not need to be implemented during this planning period. Due to their preliminary nature, no project timelines or rate increases have been designated.

1. Rehabilitate Dry Branch Interceptor

This work consists of the rehabilitation or replacement of approximately 9,200 L.F. of 10-inch and 12-inch gravity sewer with new sewer beginning just south of Sanderson Drive and extending south of Glass Avenue. The estimated total project cost is $1.4 million. This project should be implemented in the next 10 years.

2. Replacement of the Industrial Park Interceptor

This work consists of increasing the size of the 12-inch gravity sewer serving the industrial park from Bradshaw Road to the Foston Chapel SPS. A new 18-inch diameter parallel sewer is proposed so the existing pipe can remain in service during construction preventing expensive bypass pumping. The estimated total project cost of the installation of 11,000 L.F. of new 18-inch sewer is $2.6 million. This project should be implemented in the next 10 years.

3. Construction of Phase I Rock Bridge Interceptor

This project consists of the installation of a new 30-inch gravity sewer from the Hammond Wood WWTP to Hwy 41A and will allow for the elimination of the Rock Bridge SPS. This project consists of the installation of approximately 11,000 L.F. of new 30-inch gravity sewer, a bored highway crossing, a bored railroad crossing, and a crossing of the North Fork Little River at an estimated total project cost of $3.9 million. This project will reroute the sewage currently pumped by the Rock Bridge SPS directly to the Hammond Wood

WWTP. This will reduce the amount of sewage pumped by the Foston Chapel SPS and allow for acceptance of flow from development at the proposed Megasite property and the acceptance of flow from the Oak Grove WWTP if it is decommissioned. This project should be implemented in the next 20 years.

4. Construction of Phase II Rock Bridge Interceptor

This project consists of the installation of a new gravity sewer from Hwy 41A to Pembroke Road including approximately 27,000 L.F. of 18-inch gravity sewer, a bored highway crossing, and a bored railroad crossing at an estimated total project cost of $5.1 million. The construction of this project will allow for the sewage emanating in Pembroke and the Salubria Springs SPS to be routed directly to Hammond Wood WWTP in lieu of discharging to the Industrial Park interceptor and then to the Foston Chapel SPS. This project should be implemented after 20 years unless industrial development dictates otherwise.

II. Statement of Purpose and Need

A. General

The Clean Water Act requires all states to establish and maintain on-going planning processes to limit water pollution. Administrative regulations contained in 401 KAR 5:006 Wastewater Planning Requirements for Regional Planning Agencies, Section 2(b) require *"An existing regional planning agency proposes to expand the average daily design capacity of an existing wastewater treatment facility by more than thirty (30) percent."* In Hopkinsville's case, the improvements proposed in Alternative No. 1 – Renovate and Expand the Hammond Wood Wastewater Treatment Plant consist of a minimum expansion of fifty (50) percent.

B. Protection of Water Resources

The existing Hammond Wood WWTP has a good compliance record with the KPDES permit regulating the effluent discharge to the North Fork Little River. A significant need for this project consists of the overflow of raw sewage from the inlet siphon box upstream of the Plant. During high flows, the Plant cannot treat the peak flow entering the Plant which causes the siphon box to overflow raw sewage into the North Fork Little River. In addition, the correction of other sanitary sewer overflows in the collection system will reduce the volume of sewage entering the North Fork Little River which is currently listed on the 2012 303(d) List for Organic Enrichment due to sewage. Although HWEA has done a good job of ensuring that residences with failing septic systems are connected to sanitary sewer, any failing septic systems near the North Fork Little River or contributing drainages should be connected to the sewer system.

The Hammond Wood WWTP also contributes nitrogen and phosphorous to the North Fork Little River which is also listed on the 2012 303(d) List for

Nutrient/Eutrophication. The projects proposed herein will reduce the nutrient loading to the North Little Fork River.

C. Operation and Maintenance

The last renovation of the plant occurred in 1995 and most of the equipment needs replacement due to age or due to technological advancements. As a result, much of the equipment in the plant has outlived its useful life or is technologically outdated. For example, the current primary screens allow too large a size of solids into the Plant which causes harm to downstream processes. In addition, the current digesters do not allow sufficient volume for adequate sludge wasting which causes age problems in the biological process.

D. Growth

Based on the forecast increase in population and resulting sewer flows described in Section IV. Socioeconomic Characteristics of the Planning Area, the population and waste load increase is approximately 24 percent in the 20 year planning period. This increase results in biological design flows that exceed the current rated capacity of the Plant, requiring its expansion. In addition, the rehabilitation of sewers will cause any flows leaking from the system (exfiltration) to remain in the collection system which will increase the biological loading to the Plant. Sewer rehabilitation will also reduce the amount of inflow and infiltration into the system which will reduce the flow rate, increasing the biological strength of the wastewater.

The addition of new sewer customers will continue to occur by the extension of new gravity sewers into currently unsewered areas or by the construction of new residences or commercial and industrial customers on currently sewered property. Perhaps the largest potential sources of additional waste loading consists of the development of the Megasite along Interstate 24 and

the decommissioning of the Oak Grove WWTP. These sources of additional waste loading are in the same geographical area and it is possible that the development of the Megasite would make the decommissioning of the Oak Grove WWTP financially feasible since the proposed system improvements could be designed to accommodate both sources of sewage. If either of these potential sources of sewage were to be discharged, projects proposed herein will have to be implemented.

III. Physical Characteristics of the Planning Area

The City of Hopkinsville is located in Christian County Kentucky approximately 200 miles southwest of the Frankfort, Kentucky and 70 miles northwest of Nashville, Tennessee. The project planning area is located within the boundaries of Christian County, Kentucky.

The HWEA owns and operates the sewage collection and treatment systems for the cities of Hopkinsville, Oak Grove, Pembroke, and Crofton, Kentucky. Sewage emanating from the cities of Hopkinsville and Pembroke is treated at the Hammond Wood WWTP although the sewage emanating from Crofton and Oak Grove are treated by wastewater treatment plants located near those cities. As a result, there are three distinct planning areas: (1) Hopkinsville including Pembroke, (2) Oak Grove, and (3) Crofton. Separate facility plan updates for Oak Grove and Crofton will be prepared at a later date.

Regionalization consists of combining the flow of several wastewater treatment plants to one location to using a larger plant to provide treatment for all systems. This concept usually results in lower cost of treatment and less operation and maintenance headaches due to using one plant in lieu of several. Centrally locating wastewater treatment can be expensive due to the cost of wastewater pumping and transportation systems. As a result, regionalization of wastewater systems is usually accomplished when growth of a large utility extends to a smaller utility allowing for discharge of the smaller utilities sewage to the main system. This type of regionalization has occurred in Hopkinsville when they assumed operation of the Pembroke sewer system. Other opportunities for regionalization exist in Hopkinsville including the conversion of the Oak Grove and Crofton Wastewater Treatment Plants to raw sewage pumping stations and pumping to the main Hopkinsville System. The determining factor related to this regionalization is the cost of the new facilities versus the cost of continuing to operate the existing satellite wastewater plant. In the case of Oak Grove, a report was prepared titled "*Oak Grove Wastewater Treatment Plant and Sewage Pumping Stations*

Evaluation". It appears it is a "break even" comparison between the alternatives of regionalization in the case of pumping Oak Grove Sewage to Hopkinsville but none the less will require significant initial capital expense. A more logical approach is to monitor proposed industrial growth at the Megasite and combine the discharge of the Oak Grove WWTP flow with the Megasite flow when designing facilities to pump to Hammond Wood WWTP. The chance of regionalization in Crofton is low due to the very limited growth coupled with the long distance required to pump the sewage to Hopkinsville. Although the cost will be high, so will the cost of environmental disturbance required to install a new sewage force main approximately 14 miles to Hopkinsville.

The City of Hopkinsville is divided into two main surface water drainage basins which generally split the City from southwest to northeast. The northwest area of Hopkinsville drains to the North Fork Little River and the southeast area of Hopkinsville drains to the South Fork Little River. The City of Pembroke is located southeast of Hopkinsville with surface drainage into nearby Montgomery Creek which drains into the West Fork Little River which ultimately discharges to the Cumberland River near Clarksville, Tennessee. These surface drainage patterns, Regional Facility Planning area, city limits, wastewater system facilities, *etc.*, are shown on the following maps included in the Appendix.

Map No. 1 - One 11" X 17" black and white suitable for photocopying showing the 201 Planning Area Boundary, city limits, watershed boundaries, and county lines.

Map No. 2 - One 11" X 17" black and white suitable for photocopying showing the location of wastewater treatment facilities, sewage pumping stations, and public drinking water intake and treatment points.

Map No. 3 - One 24" X 36" color map showing USGS topographic features and 201 Planning area.

Map No. 4 - One 24" X 36" black and white map showing the 100 year flood plain derived from FEMA Map Nos.

Map No. 5 - One local planning and zoning land use map reflecting recent information obtained from the City of Hopkinsville, Kentucky.

The Wastewater System Maps are described in Section VI. Existing Wastewater System.

Land use patterns indicate that future growth will primarily consist of expansion of commercial and industrial growth along the Hwy 41 corridor near Interstate 24. Residential growth will primarily consist of the conversion of existing agrarian land to single family home developments as has been the case historically.

IV. Socioeconomic Characteristics of the Planning Areas

A. Population Growth

The City of Hopkinsville and Christian County have experienced moderate growth since 1980 according to available records from the Kentucky State Data Center maintained by the University of Louisville. The data indicate that census data is available for Christian County for the years of 1980, 1990, 2000, and 2010 and for the City of Hopkinsville for the years of 2000 and 2010. The census data is presented in the following Table No. IV-1.

TABLE NO. IV-1
CENSUS DATA
HOPKINSVILLE CITY AND CHRISTIAN COUNTY

Year	Hopkinsville City Population	10 Year Growth Rate	Christian County Population	10 Year Growth Rate
1900	7,280	-	37,962	-
1910	9,419	29.4%	38,845	2.3%
1920	9,696	2.9%	35,883	-7.6%
1930	10,746	10.8%	34,283	-4.5%
1940	11,724	9.1%	36,129	5.4%
1950	12,526	6.8%	42,359	17.2%
1960	19,465	55.4%	56,904	34.3%
1970	21,395	9.0%	56,224	-1.2%
1980	27,318	27.7%	66,878	18.9%
1990	29,809	9.1%	68,941	3.08%
2000	30,089	0.9%	72,265	4.82%
2010	31,577	4.95%	73,955	2.34%

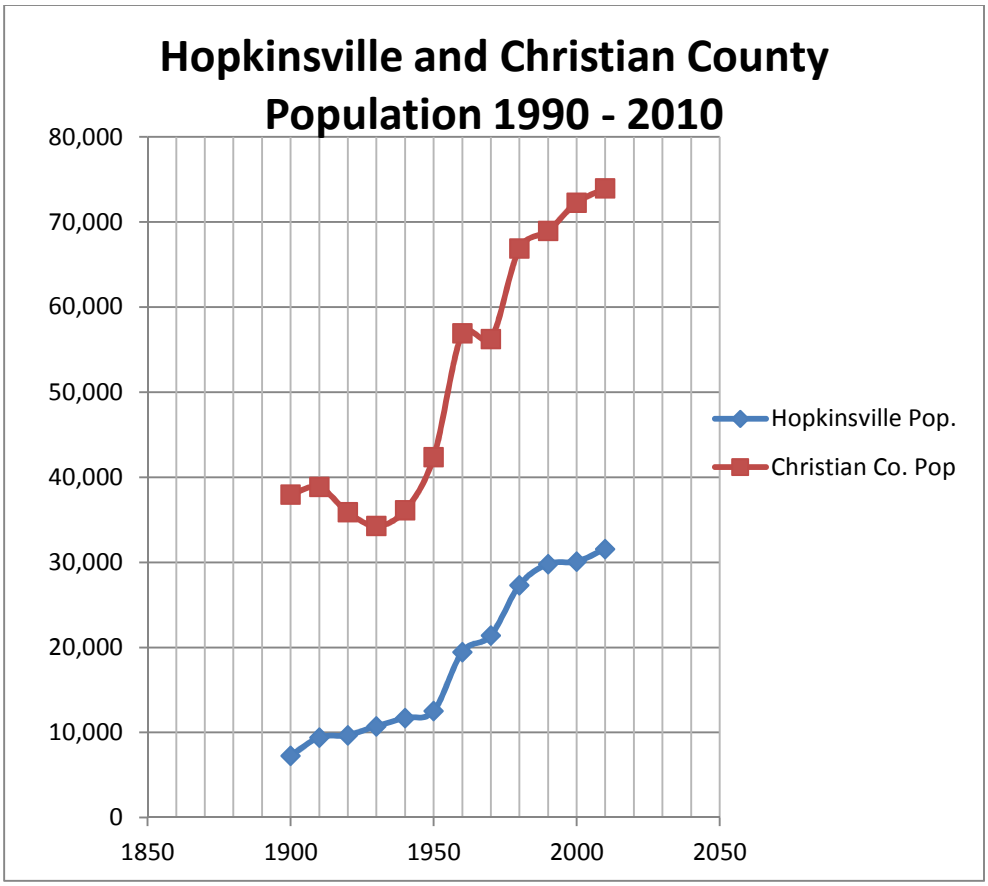

The census data in Table No. IV-1 indicates that Hopkinsville and Christian County experienced surges in growth in the 1950's and 1970's. Since that time growth has remained stable at approximately five percent every ten year period on an average basis. From 1900 to 2010 the City of Hopkinsville population increased 24,297 persons while the population of Christian County increased 35,993 persons which indicates a shift from rural farm populations to the suburban or urban populations. Another factor that contributes to this growth pattern is annexation by the City of Hopkinsville which shows an increase in City population but no increase in County population.

Projected population data from the Kentucky State Data Center is available for Christian County for the period of 2015 to 2050 although no data is

available for the City of Hopkinsville. Table No. IV-2 shows the population projections for Christian County.

TABLE NO. IV-2
PROJECTED POPULATION DATA
CHRISTIAN COUNTY

Year	Christian County Population	Five Year Growth Rate
2010	73,955	-
2015	75,962	2.71%
2020	77,480	2.00%
2025	79,580	2.71%
2030	81,015	1.80%
2035	82,081	1.32%
2040	82,947	1.06%
2045	83,726	0.94%
2050	84,474	0.89%

Examination of both aforementioned tables shows that the forecasters at the Kentucky State Data Center believe that growth in Christian County will decline in the future. The average growth rate for Hopkinsville from 1970 to 2010 is 11.8 percent every ten years which would be approximately 23.6 percent in a 20 year planning period. By comparison, the forecast growth rate for Christian County is eight percent over the next 20 years. The population forecast is not to follow the trend set from 1970 to 2010, but rather to grow only eight percent in 20 years.

The eight percent forecasted growth factor takes into account growth inside currently un-sewered areas as the chief method to add population to a municipality is through construction of new homes or apartments. Addition of births to existing homes will be offset by mortality in others which is proven by a stable average family size of 2.39 persons per house hold. One factor that is not taken into consideration in historical growth trends is the addition of wastewater sources from other municipalities or the annexation of large un-sewered areas. The impact of these factors in discussed in Section VII. Forecasts of Flows and Waste Loads in the Planning Area.

The economic impacts of increasing the availability of sewer service can be substantial. The primary reason is economic growth through the development of new property for residential, commercial, and industrial development. There are secondary benefits to the initial growth including long term economic impacts such as additional job creation and increased property and sales tax revenue. Similarly, the economic impacts of renovating and upgrading a wastewater treatment facility can be substantial as well. For example, one of the primary questions that industrial development prospects ask during the initial investigation is the status of the municipality's wastewater treatment plant. Well maintained, modern wastewater treatment plants with sufficient capacity for growth are great marketing tools for industrial development. Renovation of the wastewater treatment facility will result in a higher quality effluent which yields higher quality receiving streams. This promotes activities such as ecotourism and other outdoor related activities which can increase the economic value of natural resources.

B. Sewer Customer Growth

The number of residential, commercial, and industrial customers for Hopkinsville and Pembroke are shown in the following tables:

TABLE NO. IV-3
RESIDENTIAL SEWER CUSTOMER DATA
HOPKINSVILLE AND PEMBROKE

Year	Hopkinsville	Pembroke	Total
2004	10,136	214	10,350
2005	10,369	214	10,583
2006	10,223	213	10,436
2007	10,382	213	10,595
2008	10,495	213	10,708
2009	10,627	206	10,833
2010	10,715	215	10,930
2011	10,722	213	10,935
2012	10,967	209	11,176
2013	10,771	204	10,975
2014	10,909	204	11,113

The data indicate that the residential rate of sewer customer increase was 7.4% from 2004 to 2014 which is less than the average 10 year population growth rate used hereinbefore of 11.8%.

TABLE NO. IV-4
COMMERCIAL SEWER CUSTOMER DATA
HOPKINSVILLE AND PEMBROKE

Year	Hopkinsville	Pembroke	Total
2004	1,612	31	1,642
2005	1,616	32	1,648
2006	1,627	35	1,662
2007	1,628	34	1,662
2008	1,683	33	1,716
2009	1,641	35	1,676
2010	1,549	34	1,583
2011	1,600	29	1,629
2012	1,572	32	1,604
2013	1,629	32	1,661
2014	1,667	34	1,701

The number of commercial customers increased from 1,642 in 2004 to 1,701 in 2014, or 3.4%. The data indicate commercial customer growth through Year 2008 and then a 7.8% decline through Year 2010. This is

apparently due to the recession that occurred throughout the United States beginning in 2008.

The number of industrial sewer customers in Hopkinsville has slightly increased from 61 to 68 during the period of 2004 to 2014.

The number of future residential, commercial and industrial customers is shown in Table IV-5 based on an eight percent growth rate in 20 years.

TABLE NO. IV-5
FUTURE RESIDENTIAL, COMMERCIAL AND INDUSTRIAL CUSTOMERS
HOPKINSVILLE AND PEMBROKE, KENTUCKY

Year	Residential	Commercial	Industrial
2015	11,251	1,741	68
2020	11,476	1,776	70
2025	11,701	1,810	71
2030	11,926	1,845	72
2035	12,151	1,880	74

C. Economic and Social Impacts

The implementation of the recommendations of the Regional Facility Plan should have a significant economic and social impact on the City of Hopkinsville. The renovation and expansion of the Hammond Wood WWTP will add excess treatment capacity to accommodate future residential, commercial and industrial development. New or recently renovated wastewater treatment plants are great marketing tools in the competition to attract large employers. The social impacts of renovating the Hammond Wood WWTP include better water quality in the receiving stream, North Fork Little River, due to increased pollutant removal and reduction in the overflow of raw sewage at the siphon inlet structure at the plant influent. The other system related projects proposed herein will increase the reliability of existing parts of the sewer system which will reduce the

opportunity for future sanitary sewer overflows or pipe collapses, both of which enhance the environment of Hopkinsville.

V. Existing Environment in the Planning Areas

A. Purpose

This section discusses the physical, biological, cultural, and other resource features associated with the planning area. Discussions of air quality, climate, floodplains, wetlands, and other notable areas are conducted. Cross Cutter letters from the required agencies were received and are included in Appendix G of this report.

B. Physical

Topography: Christian County is located in the Mississippian Plateau area of southwestern Kentucky. The county is divided into two distinct terrains with the southern part nearly flat to rolling limestone plain with sinkholes common. Elevations in the southern part of the county range between 530 and 600 feet with the Little River and Red River providing drainage. The northern part of the County is a higher plateau with sandstone capped hills that at higher elevation range from 390 feet in the northwestern corner to 966 at Pilot Rock. The slopes along the ridges and hills of the northern part of the county are steep in areas. There are several manmade lakes in Christian County including Baxley, Blythe, Buntin, Morris, and Tandy. Most of these lakes were originally constructed as water supply lakes but have since ceased functioning in that capacity.

Geology: The oldest rocks at the surface of Christian County are generally of the St. Louis Limestone although the most common exposed rocks are from the Mississippian Age at approximately 350 million years followed by the Pennsylvanian Age at 320 million years. The warm climate of the Pennsylvanian Age allowed for proliferation of vegetation which fell into water and was covered by sediment eventually converting to coal. Over the last million years Quaternary sediments have been deposited along larger

streams in the area. Groundwater is obtained in areas from consolidated sedimentary rocks of the Mississippian through Pennsylvanian age.

Soils: The soils in the planning are primarily of two associations: Pembroke-Crider and Sadler-Zanesville-Nicholson.

- Pembroke-Crider – This association is dominated by well drained, deep, gently sloping to moderately steep, loamy soils. The soils are in areas of high grade, cavernous limestone capped with medium to thin layers of loess. Pembroke soils are mainly in the more undulating karst areas; while Crider soils are primarily on the broad, smooth, higher ridges. Both soils have a surface layer of silt loam, loamy in the upper part of the subsoil and clayey in the lower part. The potential of these soils is good for most uses including residential and urban uses.
- Sadler-Zanesville-Nicholson – This association is dominated by deep, moderately well drained, nearly level to sloping, loamy soils. The soils are found in the northern portion of the planning area underlain by sandstone, shale, siltstone, and limestone of the Mississippian System. The soils in this unit are very well suited for farming, but have a moderate to severe hazard of erosion and wetness due to seasonal perched water table. The potential for residential and other urban uses is only fair due to the wetness and the moderately slow to slow permeability.

Water Quality: The majority of the planning area lies within the Lower Cumberland watershed with small portions in the south lying within the Red River watershed. Major streams within the planning area include: Little River, North Fork of the Little River, South Fork of the Little River, Muddy Fork, and their tributaries. Impaired streams in the planning area are presented in Table V-1. No streams in the area have been designated as special use waters (Outstanding National Resource Water, Outstanding State Resource Water, Exceptional Reference Reach Water). Total Maximum Daily

Loads (TMDLs) for fecal coliform have been established for the North and South Forks of the Little River, as well as the Little River itself. Two Source Water Area Protection Plan (SWAPP) zones exist within the planning area for protection of water supplies for Hopkinsville and Oak Grove. No Wellhead Protection Areas exist within the planning area, but the southeastern portion is considered part of a priority watershed.

Table V-1
List of Impaired Streams
Troublesome Creek Watershed
Knott, Perry, and Breathitt Counties, Kentucky

Water Body & Segment	Support Status*	Designated Use**	Causes	Sources
Little River RM 46.1 to 58.3	NS	WAH	Nutrient/Eutrophication Biological Indicators; Organic Enrichment (Sewage) Biological Indicators; Sedimentation/Siltation	Crop Production; Municipal Point Source Discharges
Middle Branch of North Fork RM 1.3 to 3.9	PS	WAH	Nitrate/Nitrite; Sedimentation/Siltation	Agriculture; Channelization; Crop Production; Non-irrigated Crop Production; Streambank Modifications/Destabilization
North Fork of Little River RM 0.0 to 0.3	NS	WAH	Nutrient/Eutrophication Biological Indicators; Organic Enrichment (Sewage) Biological Indicators; Sedimentation/Siltation	Agriculture; Municipal Point Source Discharges; Urban Runoff/Storm Sewers
North Fork of Little River RM 0.3 to 7.0	PS	WAH	Nutrient/Eutrophication Biological Indicators; Organic Enrichment (Sewage) Biological Indicators; Sedimentation/Siltation	Agriculture; Municipal Point Source Discharges
North Fork of Little River RM 7.0 to 10.9	NS	WAH	Nutrient/Eutrophication Biological Indicators; Organic Enrichment (Sewage) Biological Indicators; Sedimentation/Siltation	Agriculture; Municipal Point Source Discharges
North Fork of Little River RM 10.9 to 16.2	NS	WAH	Nutrient/Eutrophication Biological Indicators; Organic Enrichment (Sewage) Biological Indicators; Sedimentation/Siltation	Agriculture; Municipal Point Source Discharges; Loss of Riparian Habitat; Urban Runoff/Storm Sewers
South Fork of Little River RM 0.0 to 10.3	NS	WAH	Nutrient/Eutrophication Biological Indicators; Sedimentation/Siltation; Other	Agriculture; Municipal Point Source Discharges; Unknown
South Fork of Little River RM 10.3 to 20.3	PS	WAH	Nutrient/Eutrophication Biological Indicators; Sedimentation/Siltation; Other	Agriculture
South Fork of Little River RM 21.3 to 26.1	NS	WAH	Unknown	Unknown

Source: *Integrated Report to Congress on the Condition of Water Resources in Kentucky, 2012* (305(b) and 303(d))
*NS = Non-Support, PS = Partial Support, FS = Full Support **WAH = Warmwater Aquatic Habitat, CAH = Coldwater Aquatic Habitat, PCR = Primary Contact Recreation, SCR = Secondary Contact Recreation, FC = Fish Consumption

Wetlands: Examination of the National Wetlands Inventory Maps from the U.S. Fish and Wildlife Service indicate isolated wetlands along the North Fork Little River and South Fork Little River described as "Freshwater Forested/Shrub Wetland". There are spotty locations of "Freshwater Emergent Wetlands" adjacent to existing wetlands indicated hereinbefore. Overall, the amount of wetlands in the planning area is minimal. For further information, see www.fws.gov/wetlands/data/mapper.html.

Floodplains: Due to defined channels along the North and South Fork Little Rivers, the 100 year flood plain along the rivers generally follows the channels with limited encroachment. There are other areas subject to flooding adjacent to existing Karst sinkhole areas. Map No. 4 in the Appendix indicates the areas within the 100 year flood plain.

Air Quality: The air quality in the planning area is regulated by the Kentucky Division of Air Quality, Paducah Region (Division). The Division operates one air monitoring station located in rural farmland near the eastern side of Christian County. The Division publishes data indicating that Christian County is attaining National Ambient Air Quality Standards (NAAQS). The letter from the Division summarizes the sampling in Christian County.

C. Groundwater

The majority of the planning area is served by the water system of the HWEA which utilizes Lake Barkley and a local quarry as raw water sources. The areas located outside the water service boundary of HWEA are served by groundwater or other sources. The Alluvium along the Green, Tradewater, and Pond Rivers may yield as much as 100 gallons per minute although it tends to be hard and may contain objectionable amounts of iron. Water can be obtained from the Caseyville formation in amounts up to 100 gallons per minute although at increasing depths the water can become hard and salty. The Tradewater and Chestarian may yield sufficient supply for a domestic

well although they could become dry during low rainfall periods. In general, groundwater should be avoided as a source of supply if a central potable water supply is available due to a high sensitivity to pollution over most of the planning area.

D. Climate

Hopkinsville has a moderate climate with an average high temperature of 69 degrees and average low temperature of 46 degrees. The average annual rainfall is approximately 51 inches. Hopkinsville is susceptible to violent storms travelling from the southwest and snow or ice storms in the winter from the northwest.

E. Biological Resources

Christian County is biologically diverse in regard to plant and animal species. Listed below are species from the report titled, "*Report of Endangered, Threatened, and Special Concern Plants, Animals, and Natural Communities for Christian County, Kentucky.*"

Taxonomic Group	Common Names
Crustaceans	Hairy Crayfish
Crustaceans	Mammoth Cave Crayfish
Insects	Swamp Metalmark
Insects	Rattlesnake-master Borer Moth
Insects	Northern Oak Hairstreak
Fishes	Smallscale Darter
Fishes	Shawnee Darter
Fishes	Redspotted Sunfish
Fishes	Southern Cavefish
Amphibians	Eastern Hellbender
Amphibians	Bird-voiced Treefrog
Amphibians	Barking Treefrog
Breeding Birds	Henslow's Sparrow
Breeding Birds	Northern Shoveler
Breeding Birds	Blue-winged Teal
Breeding Birds	Yellow-crowned Night-heron

Taxonomic Group	Common Names
Breeding Birds	Pied-billed Grebe
Breeding Birds	Bewick's Wren
Breeding Birds	Barn Owl
Breeding Birds	Bell's Vireo
Mammals	Southeastern Myotis
Mammals	Gray Myotis
Mammals	Indiana Bat
Mammals	Evening Bat
Vascular Plants	Earleaf False Foxglove
Vascular Plants	Blue Wild Indigo
Vascular Plants	Broadwing Sedge
Vascular Plants	Stalkgrain Sedge
Vascular Plants	Carolina Larkspur
Vascular Plants	Wedge-leaf Whitlow-grass
Vascular Plants	Dwarf Burhead
Vascular Plants	Blue Mud-plantain
Vascular Plants	Hairy Hawkweed
Vascular Plants	Round-head Bush-clover
Vascular Plants	Tall Bush-clover
Vascular Plants	Hispid Falsemallow
Vascular Plants	Hair Grass
Vascular Plants	Thread-leaf Sundrops
Vascular Plants	Hairy False Gromwell
Vascular Plants	Price's Yellow Wood Sorrel
Vascular Plants	Blue Scorpion-weed
Vascular Plants	Hairy Snoutbean
Vascular Plants	Sweet Coneflower
Vascular Plants	Hall's Bulrush
Vascular Plants	Royal Catchfly
Vascular Plants	Compassplant
Vascular Plants	Least Trillium
Vascular Plants	Southern Wild Rice
Freshwater Mussels	Mountain Creekshell
Freshwater Mussels	Fanshell
Freshwater Mussels	Pocketbook
Freshwater Mussels	Ring Pink
Freshwater Mussels	Littlewing Pearymussel
Freshwater Mussels	Fluted Kidneyshell
Freshwater Mussels	Little Spectaclecase

The project that is the focus of this Regional Facility Plan will be undertaken inside the enclosed fence at the Hammond Wood WWTP – no biological species are anticipated be impacted.

F. Cultural Resources

Hopkinsville was founded in 1804 and has a deep connection to the area's history. The City was named after Samuel Hopkins, a veteran and state representative. Initially, Bartholomew Wood and his wife Martha Ann were the first to locate in Hopkinsville and establish a cabin near present day West Seventh Street and Bethel Streets. This occurred in 1796, the same year Christian County was created. A few important historical landmarks in Hopkinsville consist of the Simon French House, the L & N Railroad Depot, the Latham Confederate Marker, and the Western Lunatic Asylum. No cultural resources are anticipated to be affected by the proposed project as all work is proposed to be performed on the existing disturbed site.

G. Water Supply

HWEA utilizes Lake Barkley as a primary source of water which is pumped to a local quarry known as the South Quarry before being pumped again to the Moss Water Treatment Plant. A secondary quarry known as the North Quarry can supply raw water during emergencies. Raw water is treated by the 15 MGD Moss Water Treatment Plant which utilizes conventional settling, filtration, and chlorine disinfection. Treated water is stored in one of three elevated water storage tanks with a combined capacity of 5.0 million gallons (one 1.0 MG and two 2.0 MG tanks). The South Quarry Intake and Moss Water Treatment Plant are equipped with standby diesel generators which allow the production of water during power outages.

H. Summary

The project under consideration consists of the expansion of the existing Hammond Wood WWTP on property currently owned by the HWEA. The majority of the existing site has been previously disturbed during past construction projects. The impact to the environment at the site will consist of exposing the existing site to erosion which will be controlled by erosion control devices during construction, fill in the floodplain, North Fork Little River Crossing, and a request for an increased Waste Load Allocation for the WWTP expansion. There are no known endangered species or archeological sites located on the project site.

The construction of the North Fork Little River crossing necessary to replace the existing siphon at the north end of the plant site can be accomplished by boring or by open-cut methods. Open-cut methods will result in temporary impacts to the river including minor sedimentation and re-routing of the flow using temporary pumps. The river crossing will be regulated by a Water Quality Certification Permit from the Division of Water.

A portion of the construction work is proposed to be conducted in the 100 year floodplain of the North Fork Little River and will result in permanent fill deposited in the floodplain. This work will require a Water Quality Certification Permit from the Division of Water and permission from the local planning office.

A Waste Load Allocation was received from Courtney Seitz, WLA Coordinator for the Division of Water, Surface Water Permits Branch related to the increased discharge flows to the North Fork Little River. A copy of the Waste Load Allocation Letter is in Appendix C of this report.

Certain streams within the planning area have been determined to be impaired as presented in the *Integrated Report to Congress on the Condition of*

Water Resources in Kentucky 2012; a copy of the pertinent excerpts are included in Appendix D of this report.

The Hammond Wood WWTP is regulated by KPDES Permit No. KY0066532, a copy of which is included in Appendix E of this report.

Hopkinsville Water Environment Authority

401 East 9th Street • P.O. Box 628 • Hopkinsville, Kentucky 42241-0628

Derrick W. Watson
President & CEO

Phone (270) 887-4246
Fax (270) 887-4244

HWEA

January 08, 2015

To All Interested Parties

RE: Potential Water / Sewer Projects
Hopkinsville Water Environment Authority

Sir or Madam:

The Hopkinsville Water Environment Authority (HWEA) is committed to full compliance with the crosscutter agency requirements. Detailed project descriptions with location maps will be sent to each of the federal and state agencies listed below as necessary to solicit their input on the potential adverse impact of each project on historical sites, endangered species, wetlands, and prime farmland. HWEA will not initiate project construction for the project(s) described in the Facilities Plan until clearance letters from each of the following agencies have been received:

- ✓ Kentucky Heritage Council
- ✓ Kentucky Department of Fish and Wildlife Resources
- ✓ U.S. Fish and Wildlife Services
- ✓ U.S. Army Corps of Engineers
- ✓ Natural Resources Conservation Service

Thank you for the opportunity to present this information. If you have any questions or comments, please do not hesitate to contact me at T # 270-887-4246 or dwatson@hwea-ky.com.

Sincerely,

Derrick W. Watson
President & CEO

cc: Greg Davenport, JR Wauford & Company, Inc.
c:\file\hwea\ESA\ESA-2013-A\KYDOW\01082015.LCM.docx

VI. Existing Wastewater System

A. General

The first sanitary sewers were installed in the City of Hopkinsville in approximately 1905. In 1940, the privately owned Hopkinsville Water Company was purchased by the City which ultimately became the Hopkinsville Water Environment Authority. As a result, many of the sewers installed in Hopkinsville consist of concrete or vitrified clay pipe which presents challenges to the system operators in regards to minimizing inflow and infiltration. Since approximately 1980, the pipe material used for new sewers consisted of polyvinyl chloride which provides greater resistance to cracking and corrosion and therefore provides a more watertight material for sanitary sewer collection.

The sewer system is divided into two main drainage basins, the North Fork Little River (North) Watershed and the South Fork Little River (South) Watershed. The sewage emanating from the North Watershed ultimately flows to the north interceptor and discharges by gravity into the Hammond Wood WWTP. The northern half of the North Watershed discharges to the Northside Sewage Pumping Station (SPS) which pumps through a 24-inch force main to the north interceptor. The South Watershed ultimately discharges to the south interceptor which discharges to the north interceptor upstream of the Hammond Wood WWTP.

HWEA also owns and operates the sanitary sewer collection systems in Pembroke, Crofton, and Oak Grove. The sewage emanating from the Oak Grove and Crofton sewer systems discharges to wastewater treatment plants located in those cities and is not the subject of this report as it relates to the Hammond Wood WWTP. The sewage emanating from Pembroke is pumped to the South Watershed and ultimately discharges to the Hammond Wood WWTP. The existing sewer system maps are included in the Appendix; an index of the maps is as follows:

Wastewater System Maps

Map No. 6.0	Wastewater System Key Map
Map No. 6.1	Wastewater System Map No. 1
Map No. 6.2	Wastewater System Map No. 2
Map No. 6.3	Wastewater System Map No. 3
Map No. 6.4	Wastewater System Map No. 4
Map No. 6.5	Wastewater System Map No. 5
Map No. 6.6	Wastewater System Map No. 6
Map No. 6.7	Wastewater System Map No. 7
Map No. 6.8	Wastewater System Map No. 8
Map No. 6.9	Wastewater System Map No. 9
Map No. 6.10	Wastewater System Map No. 10
Map No. 6.11	Wastewater System Map No. 11
Map No. 6.12	Wastewater System Map No. 12
Map No. 6.13	Wastewater System Map No. 13
Map No. 6.14	Wastewater System Map No. 14
Map No. 6.15	Wastewater System Map No. 15
Map No. 6.16	Wastewater System Map No. 16
Map No. 6.17	Wastewater System Map No. 17

There are no known on-site disposal systems in the planning area.

B. Existing Collection System

The sewage collection system for HWEA primarily consists of gravity sewers that flow to a local sewage pumping station. The Wastewater System Maps in the Appendix depict the existing system. Originally, sewage in the northwest section of Hopkinsville flowed to the Northside Wastewater Treatment Plant (WWTP) and sewers from the remainder of Hopkinsville discharged to the Hammond Wood WWTP. Approximately five years ago, the Northside WWTP was replaced with a sewage pumping station resulting in the sewage in that area being pumped to the Hammond Wood WWTP for treatment. Although present records do not depict pipeline materials for all gravity sewers in Hopkinsville, a significant portion (up to 50 percent) of existing sewers are believed to be constructed of vitrified clay or concrete, with the remainder of the pipes consisting of polyvinyl chloride. A system inventory is shown in Table VI-1 hereinafter.

TABLE NO. VI-1
SEWAGE PIPELINE INVENTORY
HOPKINSVILLE WATER ENVIRONMENT AUTHORITY

Diameter	Length (ft.)
6	8,430
8	1,122,800
10	70,300
12	80,600
14	1,490
15	10,350
18	20,300
20	900
21	120
24	5,740
27	5,100
30	7,650
36	15,680
42	2,900
48	6,760
TOTAL	**1,359,120**

As previously mentioned, approximately 50 percent of the sewers in the collection system are vitrified clay or concrete. Based upon field investigations conducted by the Engineer, many of the existing clay sewers are in poor condition with offset joints, cracks, and poor service connections. The concrete sewers are in similar shape including corroded pipe interior due to hydrogen sulfide. Many of these sewers are candidates for rehabilitation as funding becomes available.

C. On-Site Sewage Disposal Systems and Septic Systems

On-site systems are generally referred to as package plants and septic systems generally refer to septic systems serving individual residences. According to representatives with the Christian County Health Department (CCHD), no readily available list of residences in the planning area utilizing septic systems is available. Individual written records of septic tank installations are available for the previous ten years and digital records are

available for the previous five years. CCHD representatives stated any areas inside the planning area that are not served by sanitary sewers are served by septic systems and that occasionally these systems fail and will need to be connected to the sanitary sewer system. Although no records exist as to specific addresses, it is believed that approximately 50 residences are currently served by septic systems within the planning area. These systems should be monitored and connected to sanitary sewer if failure occurs.

There is one package plant in the planning area at 5246 Mt. Zoar-Latham Road which treats leachate from the Hopkinsville Landfill. The plant is located 3.5 miles north of the existing HWEA sewer system and discharges to an unnamed tributary of Lake Blythe in accordance with the requirements of KPDES Permit No. KY0098485. The plant has experienced previous violations of the KPDES permit and is currently listed as non-compliant on the EPA website titled Enforcement and Compliance History Online. The effluent violations include Iron, Mercury, Total Suspended Solids and pH. The HWEA has no intentions to assume ownership of this plant or to construct facilities to provide sanitary sewer service to the site, allowing for the elimination of the plant.

D. Sewage Pumping Stations

HWEA currently operates 59 sewage pumping stations within the planning area, all of which utilize submersible type sewage pumps. HWEA has made a concerted effort in the last 20 years to upgrade the majority of their sewage pumping stations to improve their reliability and reduce sanitary sewer overflows and operation and maintenance issues. As a result, except for the Main SPS in Pembroke, all of the sewage pumping stations are in satisfactory condition. Listed hereinafter in Table VI-2 are the sewage pumping stations operated by HWEA along with pertinent information.

TABLE NO. VI-2
SEWAGE PUMPING STATION INVENTORY
HOPKINSVILLE WATER ENVIRONMENT AUTHORITY

		Pump Characteristics					
Station Name	**# of Pumps**	**Primary GPM**	**Secondary GPM**	**HP**	**Date of Station Installation or Recent Upgrade**	**Force Main Data Diameter (In)**	**TDH (feet)**
Foston Chapel	3	4500	3 @ 4500	185	June 2004	20	82
Michael Avenue	3	3200	3 @ 3200	110	June 2004	18	70
Stone Valley	5	3840	2 @ 575	77	June 1982	12	
Quarry Road	4	2300	2 @ 510	77	June 1982	12	
Riverfront Drive	4	2030	2 @ 620	35	June 1982	12	
Millbrooke Drive	4	1890	2 @ 290	77	June 1982	10	
Conference Center	2	350	N/A	15	January 2004	8	72
Faultless Plant	2	310	N/A	3.5	Circa 1965	6	
Sunset Park	2	300	N/A	11	Rehab April 2006	6	
Commerce Park (East)	2	182	N/A	40	Rehab April 2006	6	228
Eagle Cove	2	280	N/A	10	December 1999	6	
MLK Elementary	2	250	N/A	10	June 2006	6	
KY 272 Station No 1	2	316	N/A	15	February 2007	8	74
Cardinal Drive	2	240	N/A	15	August 1995	6	103
Oakhurst	2	230	N/A	15	July 1995	6	
South Park (Wal-Mart DC)	2	230		15	December 2002	6	72
Indian Hills	2	220	N/A	11	March 1998	6	
Hermitage Hills	2	200	N/A	7.5	Rehab March 2005	4	62.4
KY 272 Station No 2	2	243	N/A	7.5	February 2007	8	40
Novadell	2	180	N/A	15	May 1998	6	
I-24 @ 41A	2	180	N/A	20	May 1998	6	
AME Homes (Woodland Heights)	2	180	N/A	10	March 2002	6	
North Main Street	2	170	N/A	5	August 1995	4	38
Dale Hollow	2	140	N/A	7.5	June 1998	4	
Bahama Drive	2	120	N/A	10	Circa 1975	4	
US 68W	2	110	N/A	5	Circa 1978	4	
Christian County Jail	2	110	N/A	3	Circa 1990	4	25
Givens Addition	2	110	N/A	3.5	Circa 1960	4	
Southfork	2	100	N/A	10	May 1998	4	
HES	2	100	N/A	2	Circa 1988	2	
Simpson Lane	2	100	N/A	7.5	Circa 1987	4	
Blooming Grove Road	2	100	N/A	11	March 1998	4	
Cayce-White	2	100	N/A	2	June 1995	4	
Hunting Creek No 1	2	100	N/A	6	Circa 1970	4	
Stadium of Champions	3	100	2 @ 22	3	June 2005	1.5.3	
Rock Bridge	2	90	N/A	6	Rehab April 2002	4	81
Pyle Lane	2	90	N/A	3	August 1995	4	90
Greenville Road HUD	2	85	N/A	3	January 1984	2.5	
Cherokee Trace	2	80	N/A	5	Circa 1968	4	
Sinking Fork	2	80	N/A	15	August 1998	4	
Bark Ridge Circle	2	60	N/A	3	Circa 1991	3	
Locust Grove	2	50	N/A	3	July 1995	3	45
Hunting Creek No 2	2	50	N/A	4	Rehab November 2001	2 1/2	
Concord Lane	2	80	N/A	3	March 2001	2	
South Christian #1	2	45	N/A	13	September 1996	3	178
South Christian #2 @ I-24	2	45	N/A	13	September 1996	3	177
Reed Industrial Park	2	54	N/A	3	Rehab January 2004	2	40
Donna Court	2	35	N/A	2	March 1998	2	
Babb Lane	2	30	N/A	3	Circa 1988	2.5	
North Drive @ West 7th	2	25	N/A	2	Circa 1979	2	
Brickyard Plaza	2	Unknown	N/A	1	Circa 1990		
WTP	2	25	N/A	2	March 2001	2	
Trail of Tears	2	20	N/A	2	June 2005	1.5	37
Windmill Farms	2	185	N/A	25	June 2007	6	70
Butler Road	2	250	N/A	3	November 2007	4	30
KY 115 South	2	180	N/A	30	January 1994	6	
Baptist Town	2	75	N/A		Circa 1993	3	
Hailes Avenue	2	100		Unknown	Circa 1983	4	
Webb Farm	2	Unknown		Unknown	Circa 1994	4	

E. Sewer System Project Currently Underway

HWEA has undertaken a three phase sewer system rehabilitation project to improve the condition of the sewer system in areas with known problems. The three phases of this project are as follows:

- Priority No. 1 Sewer System Rehabilitation (Construction Complete)

  Task No. 10. Roney Drive Sewer Replacement and Rehabilitation
  Task No. 15. Millbrook Drive Sewer Replacement and Rehabilitation

- Priority No. 2 Sewer System Rehabilitation (Construction Underway)

  Task No. 04. W. 7th St. Sewer Replacement - South Main to Bethel
  Task No. 05. W. 7th St. Sewer Replacement - Bell St. to Young St.
  Task No. 06. Young Street Sewer Replacement
  Task No. 07. Bryan Street Sewer Replacement
  Task No. 08. Stanley Street Sewer Replacement
  Task No. 09. East 13th Street Sewer Replacement
  Task No. 11. Dell Dr. Sewer Replacement
  Task No. 14. Justice Center Sewer Replacement
  Task No. 18. Durrett Avenue Sewer Replacement
  Task No. 19. Hillaire Drive Sewer Replacement
  Task No. 20. Edmunds Faulkner Street Sewer Replacement
  Task No. 21. North Main Siphon Replacement
  Task No. 22. Commerce Court Sewer Replacement
  Task No. 40. East 1st Street Sewer Replacement

- Priority No. 3 Sewer System Rehabilitation (Design Underway)

  Task No. 12. Thomas Street Sewer Replacement
  Task No. 16. Givens Addition / Riverwood Sewer Replacement
  Task No. 17. Nelson Street Sewer Replacement
  Task No. 23. Foston Chapel Road Sewer Replacement
  Task No. 39. Apache Drive Sewer Replacement
  Task No. 41. Fowler Avenue Sewer Replacement
  Task No. 42. South Woolridge Road Sewer Replacement
  Task No. 43. North Main Street Sewer Rehabilitation
  Task No. 44. Metcalfe Lane Sewer Replacement
  Task No. 45. South Campbell Street and East 17th Street Sewer Replacement

These projects should reduce the amount of inflow and infiltration into the sewer system as well as reduce the frequency of operation and maintenance issues.

F. Hammond Wood Wastewater Treatment Plant

1. General

The existing Hammond Wood Wastewater Treatment Plant was originally constructed in 1981 and consisted of a new siphon under the North Fork Little River, screw pumping, screening, grit removal, earthen flow equalization lagoons, primary clarification, biological treatment using rotating biological contactors, secondary clarification, and disinfection using gaseous chlorine. Biosolids were treated using series anaerobic digesters, dewatering and land application. In 1995, a plant renovation was undertaken consisting of the addition of one grit chamber, a secondary parshall flume, two new secondary screw pumps, two new 3.0 MGD Orbal type oxidation ditches, two new 110 foot diameter final clarifiers, new return and waste activated sludge pumping station, and miscellaneous other improvements. During the 1995 renovation, the existing rotating biological contactors were taken out of service and removed although the existing concrete underdrains remain.

2. Raw Wastewater Pumping

Raw sewage enters the plant site through a triple barrel siphon with 10-inch, 20-inch, and 24-inch barrels fed by the upstream 48-inch gravity interceptor sewer. The existing 48-inch gravity sewer was installed at 0.05% grade based upon record drawings which yields an unsurcharged capacity of approximately 18 million gallons per day (MGD). Depending upon the volume of inflow and infiltration in the sewer system, there are times that gravity sewers can surcharge

if the flow exceeds the gravity capacity flowing full and is referred to as surcharged flow. If the inlet box to the existing siphon were surcharged to the top of the upper slab, the existing siphon could transport between 28 and 32 MGD depending upon the interior condition of the pipelines. It is likely that the maximum amount of flow that will enter the plant is between 18 MGD and 28 MGD, although it is impossible to predict the actual peak flow rate as it depends upon the amount of leakage into existing sewer lines. The existing siphon barrels experience clogging at times which reduce their capacity although plant operators do not know if reduced pumping capacity or clogging causes the siphon surcharge. The existing siphon should be replaced with a gravity sewer crossing capable of atmospheric discharge to a new wetwell on the plant site which will reduce clogging and improve maintenance.

The existing raw sewage pumping station was constructed in 1981 and consists of two series sets of parallel 60-inch screw pumps each with a published capacity of 8,776 gallons per minute (GPM) or 12.64 MGD and a combined capacity of 25.28 MGD. After treatment at the headworks, the sewage flows to a separate set of screw pumps which were constructed in 1995 and pump the sewage into the existing oxidation ditches. These pumps are 66-inch diameter and have a published capacity equal to the lower sets of screws of 12.64 MGD each and 25.28 MGD together. The existing six screw pumps, which have a published firm capacity of 12.64 MGD, have exceeded their useful life and continue to experience operating issues requiring frequent repairs. In addition, there are much more efficient methods to transfer raw sewage using one stage of pumping which will also generate less odors.

3. Headworks

The existing headworks consists of a coarse screening followed by parallel grit removal devices. Flow enters the catenary bar screen from the second stage of the lower screw pumps where objects larger than 1-inch are removed. The headworks is equipped with a bypass screen with 2-inch openings for use when the existing catenary screen must be taken out of service. The existing catenary bar screen is capable of passing the flow discharged by the screw pumps. Flow then discharges to the parallel grit removal tanks which utilize gravity settling followed by removal with a grit pump. The screen has a published capacity of 19 MGD and the grit units each have a published capacity of 8.61 MGD each. After grit removal, flow passes through two 12-inch parshall flumes which each have a maximum capacity of 10.6 MGD each or 21.2 MGD together.

4. Oxidation Ditches and Final Clarifiers

Flow enters the existing oxidation ditches from the secondary screw pumps. The flow splitting that occurs at the effluent end of the secondary screw pumps is impacted by approach energy resulting in differing amounts reaching each oxidation ditch than the 50/50 split required. The existing oxidation ditches each have a biological capacity of approximately 3,000 pounds per day using a food to micro-organism ration of 0.04 and a mixed liquor volatile suspended solids concentration of 3,000 mg/l. In addition, each basin has the ability to remove approximately 250 pounds per day of total nitrogen and 50 pounds per day of total phosphorous. The concrete structures appear to be in functional shape although the mechanical components are in need of replacement. The existing surface aeration system at the plant has outlived it useful life due to reported failures of aerator shaft bearings, *etc*. In addition, the configuration

of the system is not as user friendly as more current technology. Lastly, surface aeration does not allow for mixing to occur independent of aeration which does not allow the flexibility of independently mixed and aerated systems which allow more flexible control in biological nutrient removal plants. The existing tanks are capable of being retrofitted with modern technology to allow full BOD, nitrogen, and phosphorous removal at flows up to 3.0 MGD using the forecast waste loads.

Flow from each oxidation ditch enters a 110 foot diameter final clarifier both of which appear to be in good structural condition. Based upon a peak surface overflow rate of 800 gal/day*SF, the peak discharge from the final clarifiers is 7.6 MGD each for a total peak hydraulic capacity of 14.8 MGD. The existing final clarifiers have a side water depth of 14 feet which allows for the storage of mixed liquor suspended solids during peak flow rainfall related events. Using the surface overflow rate to determine the hydraulic capacity of the final clarifiers is limited by the solids loading rate. At lower solids loading rates, the final clarifier feed rates can be increased with no appreciable increase in effluent total suspended solids concentration. As a result, the peak flow of 7.6 MGD per unit can be increased to 9.33 MGD per unit (18.66 MGD total) with a proper mixed liquor suspended solids concentration exiting the oxidation ditches. The condition of the concrete in each final clarifier appears to be in good shape although the units were not taken out of service for inspection. The center drive mechanisms for the sludge collectors have experienced previous failures and should be evaluated during the design phase as candidates for replacement. After minor rehabilitation, the existing units should have many more years of service life.

5. Return and Waste Activated Sludge Pumping Station

Flow enters the existing return and waste activated sludge pumping station through telescoping valves connected to the underflow and drain lines from each final clarifier. As the elevation of each telescoping valve is lowered, the underflow rate increases due to the increased head difference. The station contains three wet pit style submersible pumps capable of returning up to 6.0 MGD of sludge to the oxidation ditches when operating together. Waste sludge is "bled" off the return sludge line by using a throttling valve and a Doppler style flow meter attached to the outside of the waste sludge pipe. Since the proposed plant improvements include increasing the biological treatment capacity of the plant, the existing return sludge pumps will need to be replaced with higher capacity pumps. In addition, the current system of wasting sludge should be replaced with two dedicated waste sludge pumps which provide a more positive means of accurate waste sludge transfer than a throttling valve. The existing concrete structure appears to be in good working order and should provide many more years of service.

6. Disinfection

The existing disinfection system utilizes ultraviolet disinfection technology manufactured by Trojan Technologies which was retrofitted into the existing chlorine contact chamber. These units were added by change order to the 1995 plant renovation and reportedly have a capacity of approximately 15 MGD operating together. Due to the age of the units, they have experienced operating problems requiring the use of the back-up gaseous chlorine disinfection system. As a result, these units should be replaced with new UV units which will be more reliable and efficient. UV disinfection is widely applied at wastewater treatment plants due

to its simplicity and minimal regulatory oversight. The use of chlorine gas as a disinfectant has fallen out of favor due to the requirement to prepare and update Risk Management and Process Safety Management plans in the case of emergency. Since 1993, UV disinfection technology has advanced resulting in higher reliability and a lower cost of operation due to more efficient bulb technology. Another benefit of UV technology is that it eliminates the need for continual delivery of chemicals and does not expose utilities to the variability of pricing encountered by liquid chemicals in comparison to electrical power cost.

7. Cascade Post Aeration

Post aeration is provided by a cascade type step aeration structure consisting of 27 steps which are 10 feet wide and each provide a 6-inch vertical drop. The existing steps have a hydraulic capacity of 6.1 MGD according to the original design drawings and provide sufficient aeration to maintain 7.0 mg/l of dissolved oxygen in the effluent. The existing steps appear to be in good condition and can be implemented into the proposed plant renovation.

8. Biosolids Processing and Disposal

The biosolids wasted from the biological process discharge to a 25 foot diameter sludge thickener with 11'-6" side depth able to store approximately 40,000 gallons of sludge. After thickening, the sludge discharges to one of two aerobic digesters each with a diameter of 45 feet and a side water depth of 32'-6" each capable of storing 350,000 gallons. During the 1995 renovation, the anaerobic digesters were converted to aerobic units by the addition of coarse bubble aeration systems fed by blowers. After aerobic digestion, the liquid sludge is transferred to one of two belt filter presses which dewater the biosolids to approximately 15 percent solids prior to

landfilling. The current sludge wasting rate of approximately 100,000 gallons per day is overloading the undersized sludge processing facilities. The existing sludge holding tanks (450,000 gallons total) have less than one week storage which continually requires the operators to decant and process dilute sludge at the belt filter presses. In addition, the existing sludge dewatering system is 20 years old and is prone to break down, causing further solids inventory issues at the plant. As a result, the existing biosolids processing system is in need of replacement with a higher capacity and more sustainable process than landfilling. Retrofitting the existing aerobic digesters with new equipment will be cost prohibitive because additional capacity is required which would result in retrofitting the existing units as well as constructing additional units. In addition, the existing biosolids disposal system requires that ultimate disposal be controlled by the requirements of the local landfill. This situation creates uncertainty and risk for the HWEA due to the fact that the landfill can simply refuse to accept biosolids with short notice. Based upon current loading rates, approximately 4,800 tons per year of dewatered biosolids are disposed of in the landfill.

9. Reliability and Redundancy

Currently, the Hammond Wood WWTP contains redundant parallel treatment units for most critical unit processes based on low flows. At peak flows, the failure of one lower screw pump, one intermediate screw pump, one oxidation ditch or one final clarifier will compromise the treatment capacity of the plant. The existing plant currently meets the reliability and redundancy requirements of the Division of Water.

G. Hammond Wood WWTP Compliance

The Hammond Wood WWTP is regulated by KPDES permit no. KY0066532, a copy of which is located in Appendix E of this plan. Pertinent effluent limitations are depicted in Table VI-3.

TABLE NO. VI-3
HAMMOND WOOD WWTP
EFFLUENT LIMITATIONS
KPDES PERMIT NO. KY0066532

EFFLUENT CHARACTERISTICS	DISCHARGE LIMITATIONS			
	Lbs. / Day		Other Units (specify)	
	Monthly Avg.	Weekly Avg.	Monthly Avg.	Weekly Avg.
Flow, Design (6.0 MGD)	N/A	N/A	Report	Report
Biochemical Oxygen Demand (5-day), Carbonaceous	500	750	10 mg/l	15mg/l
Total Suspended Solids	1,500	2,250	30 mg/l	45 mg/l
Fecal Coliform Bacteria, N/100	N/A	N/A	200	400
Ammonia (as N) Summer Winter	100 250	150 375	2 mg/l 5 mg/l	3 mg/l 7.5 mg/l

Dissolved Oxygen shall not be less than 7 mg/l

The monthly operating reports for the period of September 1, 2013 to August 31, 2014 were examined and the only effluent violations occurring during this period were for monthly average ammonia and weekly maximum ammonia for the month of September. Generally, the existing facility has a good compliance record with the KPDES permit, with the exception of a sanitary sewer overflow that occurs upstream of the siphon during heavy rainfall events. A compliance summery is shown in Table No. VI-4 hereinafter.

TABLE NO. VI-4
HAMMOND WOOD WWTP
EFFLUENT RESULTS SEPTEMBER 2013 TO AUGUST 2014

Month	Avg. Flow (MGD)	Avg. BOD (mg/l)	Avg. TSS (mg/l)	Avg. Ammonia (mg/l)	Fecal Coliform
September 2013	3.45	1.9	7.7	2.8 *	194
October 2013	3.55	1.9	2.1	0.8	130
November 2013	3.61	1.4	2.8	0.8	37
December 2013	4.72	1.3	2.4	1.2	76
January 2014	4.58	3.2	4.4	4.9	85
February 2014	5.51	2.9	5.3	3.1	36
March 2014	5.14	2.5	3.4	2.0	51
April 2014	5.05	4.0	2.4	1.4	21
May 2014	3.67	1.6	2.8	1.2	213
June 2014	3.23	1.4	2.1	1.6	395
July 2014	2.98	2.0	3.3	1.3	272
August 2014	3.13	1.6	2.8	0.4	288

* Indicates KPDES permit violation

The effluent values depicted in Table VI-4 indicate the existing plant is doing a good job of meeting the effluent limitations of the NPDES permit

VII. Forecasts of Flows and Waste Loads in the Planning Areas

A. Hammond Wood WWTP Service Zone

Analysis of monthly operating reports was performed to determine the existing waste load values for the WWTP. The method consisted of using the summers of 2010, 2011, and 2012 and the winters of 2010-11, 2011-12, and 2012-13 which reflect the differing flow and climatic conditions that affect plant performance. For example, the diffusivity or rate that oxygen adsorbs into liquid increases as the temperature declines. Conversely, the biological k-rate or rate that carbon is absorbed by heterotrophic bacteria increased with temperature. Although the winter design flows are substantially higher than summer, the most important design values are the mass of BOD and TSS. Winter design flows are elevated by rainfall induced inflow and infiltration which does not contribute to the BOD found in normal sewage. In summary, the biological and not hydraulic flow is the most important factor when sizing aeration basin volumes.

For the data periods prior to abandonment of the Northside WWTP, the Hammond Wood and Northside WWTP values were added together to arrive at a combined flow and waste load. The 83rd percentile ranked data values were used which result in more conservative design values. Use of the average or mean data can result in a wastewater treatment plant that is overloaded up to fifty percent of the time. Although plants designed for the average or mean may meet KPDES permit limitations for daily maximum loading, they often violate the monthly average loadings at design capacity. The current waste loads entering the Hammond Wood WWTP are as follows:

TABLE NO. VII-1
83RD PERCENTILE CURRENT FLOW AND WASTE LOAD - SUMMER
HAMMOND WOOD WWTP

Summer Period	Flow (MGD)	BOD (lb/day)	TSS (lb/day)
2010	4.77	5,083	6,371
2011	4.72	6,047	9,371
2012	5.43	5,973	10,990
Average	**4.97**	**5,701**	**8,910**

TABLE NO. VII-2
83RD PERCENTILE CURRENT FLOW AND WASTE LOAD - WINTER
HAMMOND WOOD WWTP

Winter Period	Flow (MGD)	BOD (lb/day)	TSS (lb/day)
2010-11	8.54	6,435	8,536
2011-12	7.98	7,953	10,345
2012-13	5.98	4,172	5,040
Average	**7.50**	**6,187**	**7,974**
Average (strike 12-13)	**8.26**	**7,196**	**9,440**

The existing waste loads should be peaked by the selected growth factor to arrive at estimated future loads. The sewer customer growth rate is approximately 7.4 percent for the period of 2004 to 2014 or 14.8 percent in 20 years. The forecast year 2035 projection, which is only available for Christian County, is eight percent. Due to the low forecast growth rates, a nominal growth factor of 20 percent or a factor of 1.20 is more prudent. The costs of expansion for 15 percent increases versus 20 percent are not substantially different due to the need to expand the plant in 3.0 MGD increments to take advantage of existing facilities. The 20 percent growth factor allows some safety factor so the proposed facilities will adequately treat the Year 2035 design flows if the forecast is incorrect. The Year 2035 design flows and waste loads are as follows:

TABLE NO. VII-3
83RD PERCENTILE YEAR 2035 DESIGN FLOWS AND WASTE LOADS
HAMMOND WOOD WWTP

Period	Flow (MGD)	BOD (lb/day)	TSS (lb/day)
Summer	**5.96**	**6,841**	**10,692**
Winter	**9.91**	**8,635**	**11,328**

The calculations indicate that a three basin 9.0 MGD oxidation ditch will treat the Year 2035 waste loads but do not include allocations for receiving sewage from large industrial users such as those recruited for Megasite tenants or for accepting the sewage emanating from Oak Grove or from Fort Campbell. It is not recommended to construct capacity for such sources until said capacity is necessary as it will be necessary to leave the additional oxidation ditch vacant so the operators can maintain appropriate levels of biomass necessary for proper food to micro-organism ratios and mean cell residence times. In other words, too much capacity at a WWTP can be a bad thing for biological operation.

Based on the available population projection, the Year 2035 population in the service area is projected to be approximately 34,750 persons. Using the Ten State Standard recommendation of 0.17 pounds BOD per capita day, the design BOD entering the plant in the Year 2035 is 5,908 pounds per day which is less than the poundage shown in Table No. VII-3. The method used to calculate future loadings in Hopkinsville uses actual plant influent data which is more representative of conditions in Hopkinsville in lieu of published textbook valves.

B. Alternative Flow Projection

Sewage billing rates for the HWEA are figured based on water usage rates. As a result, there are instances that customers discharge more sewage to the system than they may use as potable water due to connected discharges such as downspouts, leaky private service laterals, or

condensate lines. The average daily usage of residential, commercial and industrial customers is shown below in Table VII-4.

TABLE NO. VII-4
YEAR 2014 AVERAGE DAILY WATER SALES
HOPKINSVILLE, KENTUCKY

Source	Daily Average Flow (MGD)
Residential	1.23
Commercial	0.67
Industrial	0.38
Municipal	0.23
Unaccounted	1.54
TOTAL	4.05

The unaccounted sewage discharge is the difference between all metered sales and the average flow to the Hammond Wood WWTP which includes unmetered sewage discharges and inflow and infiltration.

The projected future flows for each category is shown in Table VII-5 based on the forecast growth rates depicted in Chapter IV. Socioeconomic Characteristics of the Planning Area.

TABLE VII-5
YEAR 2035 FORECAST INDUSTRIAL, COMMERCIAL AND RESIDENTIAL FLOWS
HOPKINSVILLE, KENTUCKY

Source	Growth Rate	Year 2035 Flow (MGD)
Residential	8.0%	1.33
Commercial	8.0%	0.72
Industrial	8.8%	0.41
Municipal	8.0%	0.25
Unaccounted	8.0%	1.66
TOTAL		4.37

The difference between the Year 2035 design values of 5.96 MGD summer/9.91 MGD winter and the aforementioned 4.37 MGD is that the

design values in Table VII-3 use the 83rd percent data point in lieu of the average indicated above, and the values in Table VII-3 utilize a 1.20 growth factor in lieu of the 1.08 growth factor shown above. The values in Table VII-3 will allow the plant to meet its KPDES monthly average limits. A plant designed for average values can meet the daily average KPDES permit limitations but will likely violate the monthly average limitations due to being overloaded 50 percent of the time at the design year.

C. Potential Oak Grove WWTP / Megasite SPS Connection

The City of Oak Grove sewer collection and treatment system is owned by the HWEA although this system is outside the planning area of the Hammond Wood WWTP as it has been traditionally served by the Oak Grove WWTP which has a design capacity of 0.72 MGD. The Megasite is located adjacent to and north of the Oak Grove WWTP service area at the northeast quadrant of the Hwy 41A and Interstate 24 Exit. As a result, any consideration given to the elimination of the Oak Grove WWTP and pumping the sewage in Oak Grove to the Hammond Wood WWTP must consider sewer service at the Megasite due to the close proximity. A report prepared adjunct to this Regional Facility Plan titled, "*Oak Grove Wastewater Treatment Plant and Sewage Pumping Station Evaluation*" describes the anticipated waste loads and estimated costs of re-routing the Oak Grove sewer system to pump to the Hammond Wood WWTP. The estimated Year 2035 design flows emanating from the Oak Grove WWTP and proposed Megasite are shown in the following table.

TABLE VII-6
ESTIMATED OAK GROVE WWTP AND MEGASITE FLOWS

Facility	Year 2035 Average Daily Flow (MGD)	Year 2035 Peak Daily Flow (MGD)
Oak Grove WWTP	0.60 MGD	2.30 MGD
Megasite	1.00 MGD	1.00 MGD
Total	1.60 MGD	3.30 MGD

The data indicate that if the Oak Grove WWTP is abandoned without the development of the Megasite, sufficient capacity exists in the proposed Hammond Wood WWTP improvements to accept the 0.60 MGD average daily sewage flow. If the Megasite is developed to its full potential in conjunction with abandoning the Oak Grove WWTP resulting in a 1.60 MGD flow addition to the Hammond Wood WWTP, a plant expansion to 12.0 MGD may be required. Due to the "wish-list" status of the Megasite development, it is not prudent to fund the full expansion of the Hammond Wood WWTP to 12.0 MGD without a firm commitment of a large industrial user such as an automobile manufacturing plant at the Megasite. Another factor that may not require expansion to accept the Megasite discharge is the weak biological strength of sewage emanating from large industrial manufacturing facilities such as automobile manufacturers. Since the primary factor requiring the expansion of the Hammond Wood WWTP to 12.0 MGD will be biological loading, the smartest course of action is to implement the 9.0 MGD expansion proposed herein and subsequently examine the anticipated discharge loadings of industrial development candidates prior to expansion of the plant. If a large industrial user with a high biological waste strength discharge were to propose locating to the Megasite, it is very likely that the additional oxidation ditch and final clarifier required to expand the plant to 12.0 MGD can be constructed in less time that the construction of the industrial plant. The 9.0 MGD alternative proposed herein includes sufficient facilities such as future piping terminations to allow an expedited and cost efficient expansion to 12.0 MGD.

D. Inflow and Infiltration

The projections stated hereinbefore use flow measuring data in an attempt to accurately forecast future flows. This data was used to calculate the average per capita flows in the existing service area. This information is

described in detail in the report "*Wet Weather Events Assessment / Inflow and Infiltration Reduction*", a copy of which is included in the Appendix.

Based upon a sewered population of 29,797 persons in the Year 2013, and an average daily flow rate of 4.42 MGD, the average per capita flow was 141 gpcd, excluding the industrial flow of 0.23 MGD. This average per capita flow rate is in excess of the definition of excessive inflow and infiltration by the Kentucky Division of Water, which is 120 gpcd.

VIII. Evaluation of Alternatives

A. General

Three alternatives are discussed in this plan to correct the deficiencies and allow capacity expansion at the Hammond Wood WWTP which are as follows:

Alternative No. 1:	Use of Oxidation Ditch Technology and Continued Discharge to North Fork Little River
Alternative No. 2:	Use of Oxidation Ditch Technology and Discharge to Lake Barkley
Alternative No. 3:	Use of Sequencing Batch Reactor Technology and Discharge to North Fork Little River
Alternative No. 4:	No Action

Basically, there are no realistic alternatives to renovation of the Hammond Wood WWTP and continued discharge to North Fork Little River (Alternative No. 1). Alternative No. 2 provides a comparative evaluation of discharging the plant effluent to a higher flow stream than the North Fork Little River. Alternative No. 3 consists of constructing new Sequencing Batch Reactor Basins and abandonment of the existing oxidation ditch which will require additional property acquisition. HWEA could decide to construct a new plant at a separate location, but the cost of all new facilities will assuredly be higher than a plant renovation which reuses existing oxidation ditches and final clarifier. In addition, the environmental and social impacts of constructing a new wastewater treatment plant at a new site are very high.

B. Alternative No. 1 – Use of Oxidation Ditch Technology and Continued Discharge to North Fork Little River

1. General

Alternative No. 1 consists of expanding the Hammond Wood WWTP to continue discharge to River Mile 61.3 of the North Fork Little River at an estimated total project cost of $35,250,000 as shown on Cost Estimate No. 1. The expansion is proposed to increase the Hammond Wood WWTP capacity to treat the design flows and waste loads described hereinbefore in Section VII. Forecasts of Flows and Waste Loads in the Planning Area. The proposed project consists of the construction of one oxidation ditch and final clarifier as part of this project and allows for the addition of oxidation ditch no. 4 and final clarifier no. 4 as required in the future. During the design phase of the proposed project, the necessary piping and connections should be installed so that plant site disturbance is minimized during the construction of oxidation ditch no. 4 and final clarifier no. 4. The improvements consist of the following unit processes which are depicted on Figure VIII-1 hereinafter.

a. New raw sewage pumping station including river crossing

b. New headworks with fine screening and grit removal

c. New anaerobic reactor related to phosphorous removal

d. Renovation of two existing oxidation ditches with fine bubble diffusers and mixers

e. One new oxidation ditch with fine bubble diffusers and mixers

f. One new blower building

g. One new 110 foot diameter final clarifier

h. Renovation of the raw and waste activated sludge pumping station

i. New ultraviolet disinfection and effluent re-use facilities

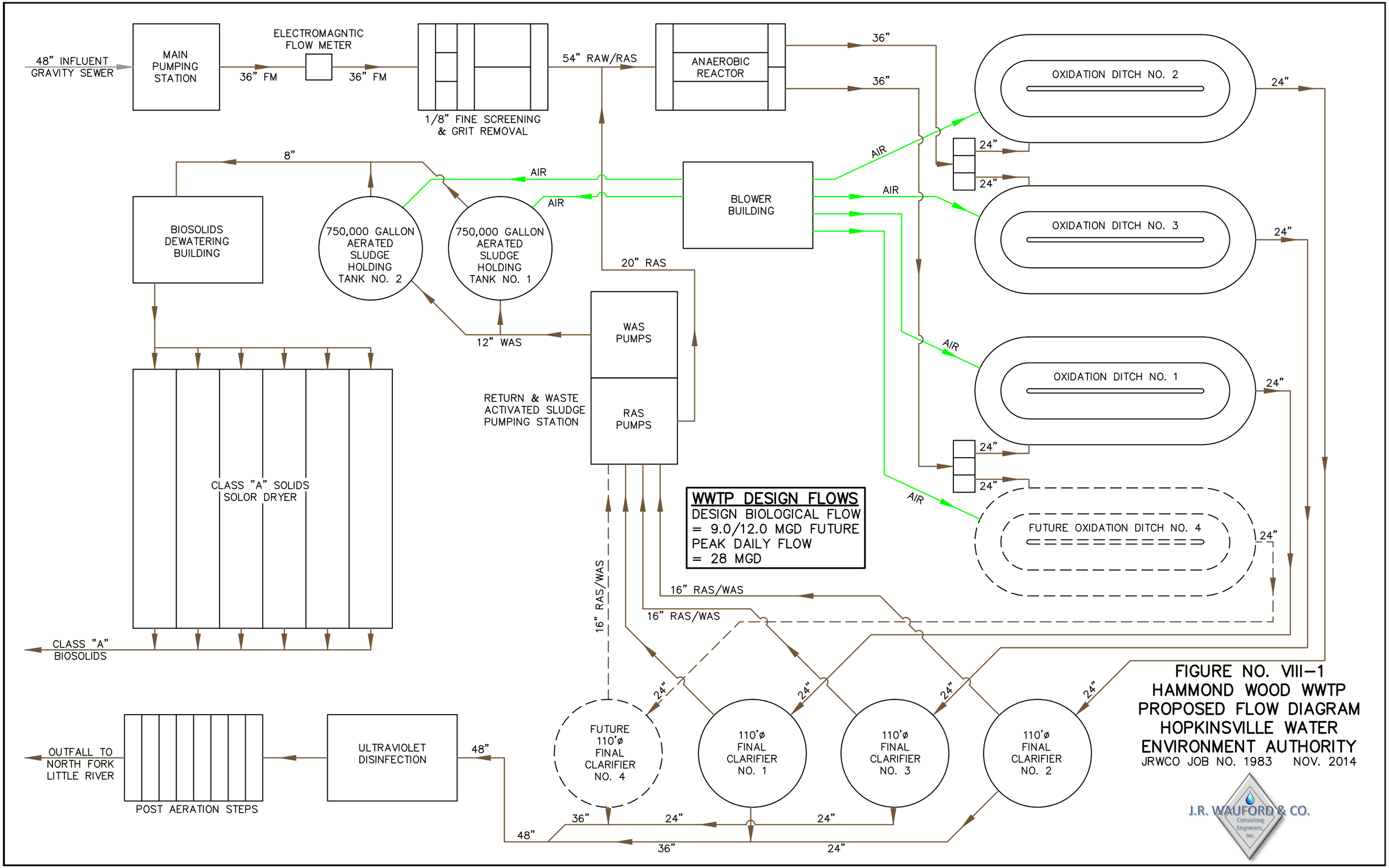

FIGURE NO. VIII–1
HAMMOND WOOD WWTP
PROPOSED FLOW DIAGRAM
HOPKINSVILLE WATER ENVIRONMENT AUTHORITY
JRWCO JOB NO. 1983 NOV. 2014

J.R. WAUFORD & CO.
Consulting Engineers, Inc.

j. Two new 750,000 gallon aerated sludge holding tanks

k. Three new sludge transfer pumps

l. Two new sludge dewatering presses

m. Six new 42' by 265' solar drying chambers with concrete floors and push walls

n. New operations and maintenance building

o. New electrical service and building

p. New diesel powered standby generator and automatic transfer switch

q. Associated site piping and site development improvements

2. Raw Wastewater Pumping Station

Since the improvements to the plant include a new headworks, a more efficient system of raw sewage conveyance consisting of constructing a new raw sewage pumping station with four variable speed wet pit submersible pumps with external valve pit and air conditioned variable frequency drive and electrical building should be considered. This system will result in the elimination of three sets of screw pumps (six screws total) and replacement with one set of submersible pumps. In addition, the wetwell of the new station is proposed to be constructed at an elevation allowing gravity sewer flow from the North Interceptor and Rock Bridge Interceptor without the use of maintenance intensive siphons. The station can be designed to increase or decrease the speed of the operating pumps in response to a rise or fall in wetwell level corresponding to the varying influent raw sewage flows. The new raw sewage pumping station is proposed to be located adjacent to the abandoned equalization basin pumping wetwell at the north end of the site. The pumping concept includes installation or four pumps with the two

smaller pumps having a combined capacity operating together equal to the capacity of one large pump. Based on a 28 MGD peak flow rate, the two large pumps are proposed to have a capacity of 14 MGD each and the two smaller pumps are proposed to have a capacity of 7 MGD each. During average daily flow conditions, one smaller pump is proposed to operate at a reduced speed to match the flow rate of the incoming raw sewage. During rainfall events, a second small pump can be called to operate and their speeds increased to match the incoming flow rate up to 14 MGD. For flows over 14 MGD, one large pump can operate in parallel with the two smaller pumps or two large pumps can operate together. During dry times, the large pumps should be operated from time to time to keep them in good operating condition. This can be accomplished with the control and operating system.

3. Headworks

New technologies exist that can provide substantially better treatment than the existing facilities including 0.125-inch opening fine screens and classified grit removal. Since the raw wastewater pumping concept consists of elimination of all screw pumps and using one pumping stage with submersible pumping technology. The new headworks can be constructed at sufficient elevation to allow gravity flow through the remainder of the plant.

The new headworks is proposed to receive flow directly from the new raw wastewater pumping station through a 36-inch force main. Flow to the headworks is proposed to be measured by an electro-magnetic flow meter and then proceeds to an influent channel for distribution to the wastewater screens. The screens are proposed to utilize 1/8-inch openings and automatically transport the screenings for washing and conveying to an on-site dumpster. The new headworks

can utilize either (1) three automatic screens with a capacity of 14 MGD each which allows for redundancy or (2) two automatic screens that treat approximately 14 MGD each with a manual center screen. The use of the manual screen in lieu of an automatic screen will require a plant operator to remove material during the time that one automatic screen is being repaired but will save the cost of the initial purchase of the third screen. Washing the screenings allows the inert material to be removed and the organic material to be washed back into the channel for treatment at the oxidation ditches which reduces odors. Grit removal is proposed to occur using either a classified system with a cyclone concentrator or a vortex style grit removal device with dewatering conveyor. The grit removed from the process is proposed to be discharged directly to a separate on site dumpster. If a grit classifier system is used, the water removed from the process will need to be discharged back to the main raw sewage pumping station located on the site. A conceptual drawing of the proposed headworks is depicted at Figure VIII-2.

The renovated return and waste activated sludge pumping station is proposed to discharge directly to the effluent pipeline from the headworks. The mixture of raw wastewater and return activated sludge flows by gravity to the new anaerobic reactor through a proposed 54-inch pipeline.

4. Septage Receiving Station

A septage receiving station is proposed to be located at the plant site to accept waste hauled to the site by septic haulers. The treatment components of the system should consist of grinder, screen, washing compactor, and screenings holding compartment. The effluent liquid from the septage receiving station should be discharged to the new raw sewage pumping station discharge prior to the headworks for full

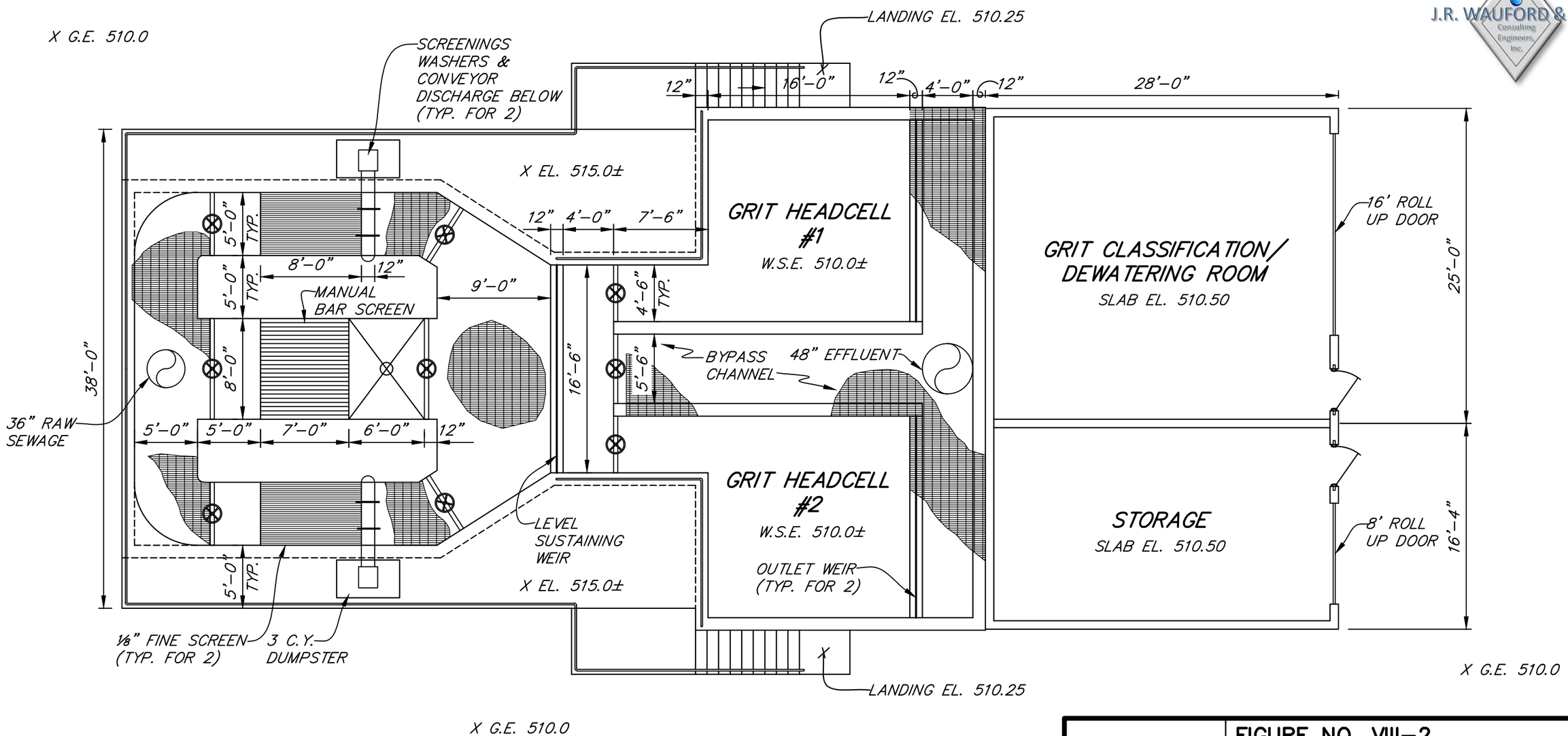

J.R. WAUFORD & CO. Consulting Engineers, Inc.

REVISIONS	FIGURE NO. VIII-2 HEADWORKS TOP PLAN
	HAMMOND WOOD HEADWORKS
	FOR HOPKINSVILLE WATER ENVIRONMENT AUTHORITY HOPKINSVILLE, KENTUCKY

APPROVED	SCALE	J. R. WAUFORD & CO.	DESIGNED
	1/8"=1'-0"	CONSULTING ENGINEERS, INC.	JGD
	DATE	NASHVILLE, TENNESSEE	DRAWN WZM
	NOV. 2014	JOB NO. 1983	CHECKED JGD

treatment. Due to the variability of the waste stream delivered by waste haulers, it is recommended that the system be supplied with a key code or magnetic card security system that only allows registered users to discharge to the system. This type system also keeps track of the discharger, time of discharge, and discharge volume in case there is a problem with the discharged waste stream.

The septic receiving station equipment should be supplied by a single vendor regularly engaged in the manufacture of this type equipment and should be housed in a building protected from rainfall. Considering the noxious nature of the flow entering the equipment, it is not recommended to house the equipment in an enclosed building. The equipment should be factory supplied with equipment to protect it from freezing.

5. Anaerobic Reactor

Due to the increased probability of a total phosphorous limitation in the KPDES permit, the plant renovation should include facilities for the biological phosphorous treatment. The existing oxidation ditch technology is well suited for modification for biological phosphorous removal by adding an upstream anaerobic reactor. The anaerobic reactor allows for the combination of raw wastewater effluent from the headworks to be combined with return activated sludge which allows the mixture to become anaerobic due to biological activity without aeration. The anaerobic conditions allow for acetate to be taken up by phosphorous storing bacteria which then increases the carbon storage thereby allowing for increased growth in the oxidation ditches allowing for additional phosphorous uptake. It is important to note that phosphorous is not destroyed in the treatment process; it is stored in bacteria cells and then wasted out of the process in the waste sludge. It is very important that the sludge treatment unit

processes be designed not to allow anoxic or anaerobic conditions which would allow secondary phosphorous release and recycle to the headworks in the supernatant waste stream. For biological phosphorous removal to function properly, the plant must also denitrify so that excess nitrate is not recycled to the anaerobic reactor in the return activated sludge. This condition allows heterotrophic bacteria to use the oxygen present in nitrate to consume BOD which inhibits the creation of anaerobic conditions.

For proper distribution, the anaerobic reactor is proposed to have two effluent weirs that initially route 67 percent of the effluent to existing oxidation ditch nos. 1 and 2 and 33 percent to the new oxidation ditch no. 3. When oxidation ditch no.4 is constructed at some future time, the effluent weir at the anaerobic reactor feeding those units should be doubled in length allowing 50 percent of the flow to be routed to each set of oxidation ditches.

6. Oxidation Ditches and Final Clarifiers

The Year 2035 waste load forecast can be adequately treated by three oxidation ditches allowing for the construction of oxidation ditch no. 4 at when required. The location of a large industrial user at the Megasite near Interstate 24 could require expansion but should be evaluated based upon that industry's individual flow data. As a result, the current concept is to construct oxidation ditch no. 3 and a new 110 foot diameter final clarifier no. 3. Flow discharged from the anaerobic reactor is proposed to enter a new mixed liquor distribution structure which will equally split the flow to proposed oxidation ditch no. 3 and future oxidation ditch no. 4 in the future. Initially, the outlet pipe to future oxidation ditch no. 4 will be plugged for connection in the future. The flow discharged from the mixed liquor distribution structure then enters proposed oxidation ditch no. 3 for anoxic

treatment allowing denitrification and aerobic treatment for BOD removal.

In order to provide efficient denitrification at the plant, new recirculation pumps will need to be installed at the center effluent trough of the oxidation ditches. These pumps will recycle the nitrate rich mixed liquor to the influent ditch where it is combined with the incoming raw sewage which allows the use of nitrate for respiration in an anoxic zone. These pumps should be sized to pump between two to four times the biological design flow of each basin, or approximately 6 to 12 MGD recycle flow rate. Due to the low head required with recycle pumping, the amount of horsepower require for each pump (two per basin) is estimated to be approximately 20 HP.

The existing surface aeration system at the plant has outlived it useful life due to reported failures of aerator shaft bearings, *etc*. In addition, the configuration of the system is not as user friendly as more current technology. Lastly, surface aeration does not allow for mixing to occur independent of aeration which does not allow the flexibility of independently mixed and aerated systems. An alternative system consists of installing a perforated membrane fine bubble diffused air system fed by variable speed blowers coupled with large diameter propeller mixers to provide the motive force to the mixed liquor. Figure VIII-3 depicts the main aeration system blower and biosolids process blowers in the proposed blower building.

This system allows for the mixers to keep mixed liquor suspended and moving through the treatment train while allowing the fine bubble aeration system to provide aeration in response to the oxidation/reduction potential measured in the mixed liquor. The results are more precise control of the anoxic and aerobic treatment

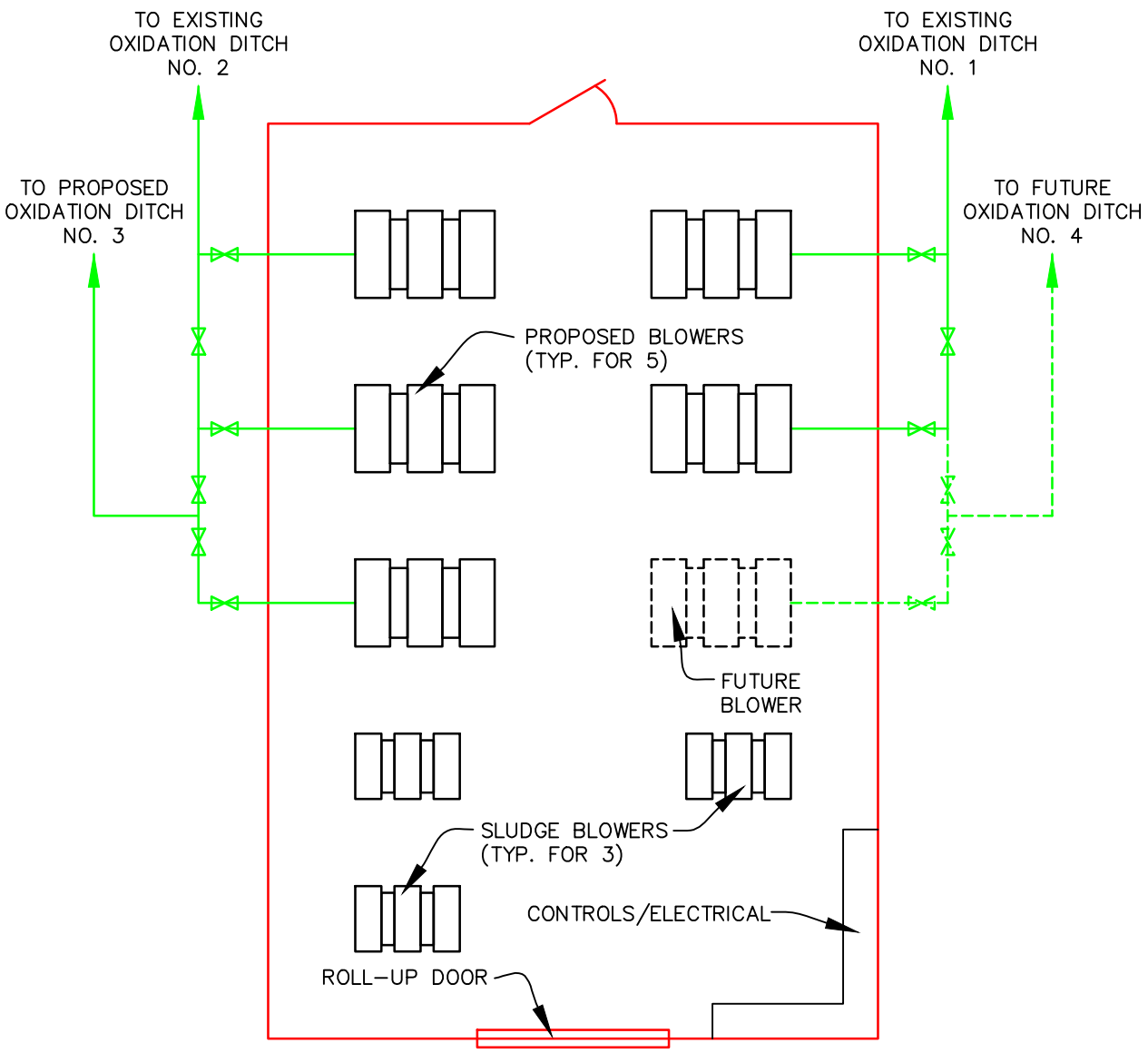

BLOWER BUILDING SCHEMATIC

NOT TO SCALE

FIGURE NO. VIII-3
HAMMOND WOOD WWTP
HOPKINSVILLE WATER ENVIRONMENT AUTHORITY

JRWCO JOB NO. 1983

NOVEMBER 2014

and the realization of energy savings by only providing aeration in response to process needs.

After biological treatment is complete, the effluent from proposed oxidation ditch no. 3 discharges to proposed 110 foot diameter final clarifier no. 3. Based upon a peak surface overflow rate of 800 gal/day*SF, the peak discharge from the final clarifiers is 7.6 MGD each for a total peak hydraulic capacity of 22.8 MGD. The existing final clarifiers are 110 feet in diameter and have a side water depth of 14 feet which allows for the storage of mixed liquor suspended solids during peak flow rainfall related events. The new final clarifier should be at least 14 feet deep and possibly 16 feet deep depending upon solids loading rate during rainfall events. Using the surface overflow rate to determine the hydraulic capacity of the final clarifiers is limited by the solids loading rate. At lower solids loading rates, the final clarifier feed rates can be increased with no appreciable increase in effluent total suspended solids concentration. As a result, the peak flow of 7.6 MGD per unit can be increased to 9.33 MGD per unit (28 MGD total) with a proper mixed liquor suspended solids concentration exiting the oxidation ditches.

7. Return and Waste Activated Sludge Pumping Station

The proposed plant improvements include renovation of the existing return and waste activated sludge (WAS) pumping station in order to increase the capacity for the plant expansion. The renovation is proposed to include removal of the existing submersible pumps and replacement with new larger capacity pumps.

The new return activated sludge (RAS) pumps should be able to transport the volume of sludge equal to 100 percent of the biological design capacity. The current project proposes the expansion of the plant to 9.0 MGD although it can subsequently be easily expanded

to 12.0 MGD to accommodate a large industrial user or acceptance of sewage from another treatment plant. As a result, it is proposed to install three RAS pumps, with two pumps capable of transporting 12.0 MGD when operating together, or 6.0 MGD each. The pumps are proposed to be operated by variable frequency drives allowing the operators to increase or decrease the pumps speeds in response to varying raw wastewater flow rates.

The two waste activated sludge pumps are proposed to transport the anticipated daily waste sludge amount in four hours or less. The anticipated year 2035 sludge wasting rate is 100,000 gallons which would require a 410 gallon per minute (GPM) pump. As a result, two 500 GPM waste sludge pumps are proposed, each capable of transporting the required amount of waste sludge in approximately four hours.

Both the return and waste activated sludge force mains are proposed to be equipped with electromagnetic flow meters which allow the plant operators to accurately control the RAS flow to the headworks effluent and the total volume of WAS transported daily to the sludge holding tanks.

8. Disinfection

The existing disinfection system utilizes ultraviolet disinfection technology manufactured by Trojan Technologies which was retrofitted into the existing chlorine contact chamber. UV disinfection is widely applied at wastewater treatment plants due to its simplicity and minimal regulatory oversight. The use of chlorine gas as a disinfectant has fallen out of favor due to the requirement to prepare and update Risk Management and Process Safety Management plans in the case of emergency. Since 1993, UV disinfection technology has advanced resulting in higher reliability and a lower

cost of operation due to more efficient bulb technology. Another benefit of UV technology is that it eliminates the need for continual delivery of chemicals and does not expose utilities to the variability of pricing encountered by liquid chemicals in comparison to electrical power cost.

The ultraviolet disinfection technology proposed for the expansion of the Hammond Wood WWTP should be able to disinfect the effluent produced by the plant regardless of flow rate. The peak effluent flow from the Hammond Wood WWTP is estimated to reach approximately 28 MGD which would require three series units each capable of treating 14 MGD which allows for compliance with the KPDES permit with one unit out of service. The units are proposed to be installed in one of the existing contact chamber channels which are approximately 8 feet wide by 54 feet long with a side water depth of 8'-6". The supporting equipment should be housed in a three sided metal building which shields the equipment from direct exposure to the weather or to direct sunlight. The installation of the ultraviolet disinfection equipment should occur at the west side of the existing contact basins which will allow the existing units installed in the east basin to remain in operation during construction. It appears that the new units can be installed in the inner most channel of the west basin and allow the outer two channels to be covered with a concrete slab allowing the support building and effluent re-use system to be installed atop the contact chamber. After construction is complete and the new units are in operation, the existing ultraviolet disinfection equipment can be removed by isolating the influent gates to the existing contact chambers.

The ultraviolet disinfection equipment is proposed to consist of three low pressure high intensity UV disinfection banks, influent electromagnetic flow meter, UV transmittance sensor, automatic

downstream level control gate, PLC based control system, and supporting electrical equipment and control panels. The control system uses 4 to 20 mA inputs from the flow meter and transmittance sensor to modify the bulb output of each unit to supply the necessary power for disinfection which allows the units to save power during lower flows and times of increased effluent transmittance.

9. Effluent Re-use System

a. General

The use of treated wastewater effluent for non-potable uses at wastewater treatment plant sites saves utilities the expense of using potable water in said instances. The quality of effluent produced by the plant improvements proposed herein lends itself to re-use which is broken into two general classifications: (1) restricted cases and (2) unrestricted cases. The unrestricted use of effluent, meaning public access is not restricted, requires a higher level of treatment due to the increased level of human contact.

b. Onsite Effluent Re-Use System

The onsite effluent re-use system is proposed to provide disinfected non-potable effluent to the Hammond Wood WWTP site for use as washdown water or for use in processes that require water such as the fine screens, grit equipment, polymer feed system, *etc*. The proposed system consists of two vertical turbine pumps mounted downstream of the ultraviolet disinfection units complete with two steel pressure tanks and controls. When the liquid level in the pressure tanks falls to a preset level, the control panel requires one pump to operate to fill the pressure tanks to a

preset "full" level. As re-use water is used, the level in the tank falls and the second pump is called to operate. These type systems can be supplied as a package unit from multiple manufacturers.

The re-use system can be sized to supply re-use water offsite if desired by larger water users such as golf courses. It is recommended that any re-use water that is pumped for offsite usage be chlorinated to maintain a residual in case of human contact. Wastewater treatment plant operators are trained to deal with treated effluent where the general public is mostly accustomed to potable water that can be used for any purpose.

c. Off-site Effluent Re-use System

Off-site re-use of treated wastewater effluent consists of pumping the effluent off the plant site for use in various cases such as agricultural irrigation, groundwater recharge, golf course irrigation, cooling tower supply, and residential irrigation systems. The beneficial re-use of treated wastewater for non-potable uses reduces the demand upon potable water sources which is one reason that effluent re-use systems are more popular in areas with water shortages.

The regulatory guidelines for the use of treated effluent for re-use are contained in the document "*2012 Guidelines for Water Reuse*", parts of which are included in Appendix F. There are no current regulations promulgated by the Commonwealth of Kentucky which specifically address requirements for the re-use of wastewater treatment plant effluent. The three most likely categories of effluent re-use near the Hammond Wood WWTP are: (1) application at a local golf course (Unrestricted

Urban Use); (2) application to Processed Food Crops; and (3) application to Non-Food Crops. The EPA guidelines excerpted from the "*2012 Guidelines for Water Reuse*" for treatment levels required for each of these categories are as follows; please see Appendix F for more specific information.

Urban Re-use			
Unrestricted The use of reclaimed water in nonpotable applications in municipal settings where public access is not restricted	• Secondary • Filtration • Disinfection	• pH = 6.0-9.0 • ≤ 10 mg/l BOD • ≤ 2 NTU • No detectable fecal coliform/100 ml • 1 mg/l Cl_2 residual (min.)	• pH – weekly • BOD – weekly • Turbidity – continuous • Fecal coliform – daily • Cl_2 residual - continuous
Restricted The use of reclaimed water in nonpotable applications in municipal settings where public access is controlled or restricted by physical or institutional barriers, such as fencing, advisory signage, or temporal access restriction	• Secondary • Disinfection	• pH = 6.0-9.0 • ≤ 30 mg/l BOD • ≤ 30 mg/l TSS • ≤ 200 fecal coliform/100 ml • 1 mg/l Cl_2 residual (min.)	• pH – weekly • BOD – weekly • TSS - daily • Fecal coliform – daily • Cl_2 residual - continuous
Agricultural Re-use			
Food Crops The use of reclaimed water for surface or spray irrigation of food crops which are intended for human consumption, consumed raw	• Secondary • Filtration • Disinfection	• pH = 6.0-9.0 • ≤ 10 mg/l BOD • ≤ 2 NTU • No detectable fecal coliform/100 ml • 1 mg/l Cl_2 residual (min.)	• pH – weekly • BOD – weekly • Turbidity - continuous • Fecal coliform – daily • Cl_2 residual - continuous
Processed Food Crop The use of reclaimed water for surface irrigation of food crops which are intended for human consumption, commercially processed ***Non-Food Crops*** The use of reclaimed water for irrigation of crops which are not consumed by humans, including fodder, fiber, and seed crops, or to irrigate pasture land, commercial nurseries, and sod farms	• Secondary • Disinfection	• pH = 6.0-9.0 • ≤ 30 mg/l BOD • ≤ 30 mg/l TSS • ≤ 200 fecal coliform/100 ml • 1 mg/l Cl_2 residual (min.)	• pH – weekly • BOD – weekly • TSS - daily • Fecal coliform – daily • Cl_2 residual - continuous

Application of treated effluent to an area with human contact such as a local golf course requires effluent filtration and additional monitoring for turbidity. The construction and operation of effluent filtration facilities is expensive and should be avoided unless required for discharge of effluent to the receiving stream. Conversely, re-use of effluent for irrigation of processed food crops such as soybeans and corn and to non-food crops such as grazing pastures requires a lower level of treatment which would already be obtained by the treatment facilities proposed in this report. The majority of the area surrounding the Hammond Wood WWTP site is agrarian with the exception of occasional subdivisions and rural home sites. As a result, it is recommended that if an off-site effluent re-use system is pursued that it be confined to usages such as processed food crops and non-food crops to prevent the costly construction of effluent filtration facilities required for human contact re-use.

The usage rates and proximity of potential agricultural re-use sites to the Hammond Wood WWTP site affect the size of facilities required for storage and distribution. The basic facilities would consist of an effluent pumping station that is capable of transporting the desired flow rate from the plant site to the application point. The wetwell of the station should be configured so that effluent entering the pumping station would automatically overflow the wetwell to the plant outfall so that the station can operate intermittently if required. The maximum capacity of the station should be set at the design flow of the plant and each pump should be powered by variable frequency drives so the irrigation demand can be matched by the station. The pump head should be configured to consider the friction head loss from the plant site to the

irrigation site as well as static head and the head required to be furnished to the irrigation device. The most likely irrigation device will be a center pivot irrigation unit which should have a set flow rate and necessary pressure requirements.

All pipe, connections valves, *etc.*, should be colored purple to prevent the accidental connection by the water utility to a reclaimed water pipeline. The service connections for the irrigation points should extend to the property line with the connection designed to be user friendly and universal. The amount of re-use water that can be supplied could not exceed the daily flow of the Hammond Wood WWTP unless re-use water storage facilities are constructed, which can be very costly. The design flow of the plant is 9.0 MGD which is approximately 6,250 gallons per minute or 14.0 cubic feet per second (CFS), although the actual flow to the plant will be less during drier times of the year that irrigation is desired. At the design flow of 14.0 CFS, a 100 acre field can be irrigated with 1-inch of re-use water in 7.2 hours. This type of flow rate will require a 16-inch or 18-inch pipeline for conveyance.

Re-use water agreements will need to be executed between the utility and the user with user rates established. The utility should be careful not to imply that re-use water will be available at any and all times it is desired by the end user. For example, several end users will need to work together and allow irrigation of agricultural land at optimum times for the utility and not just for the end user. If all end users desire to irrigate any time they desire, the utility will not be able to accommodate the demand since the need for irrigation will generally occur simultaneously for all end users. Instead, the end users will have to agree that they have a set usage time

they can withdraw water from the effluent re-use system so as to prevent overlaps in demand locations.

10. Tertiary Treatment

The improvements proposed herein will allow the Hammond Wood WWTP to provide biological nutrient removal treatment for the reduction of total nitrogen and total phosphorous in the effluent discharged to North Fork Little River to the levels required in the Waste Load Allocation letter issued by KDOW on April 25, 2014.

In order to ensure no total phosphorous violations occur, it is recommended that improvements for supplemental chemical phosphorous removal be included in the plant improvements. These improvements are proposed to include renovation of the existing chemical building to allow for feeding an iron salt or other coagulant at the influent to the secondary clarifiers to promote precipitation of soluble phosphorous not removed by the biological process. The basic improvements are proposed to consist of liquid chemical feed tanks and a chemical feed pump dedicated to each final clarifier.

11. New Electrical Service and Standby Power System

The proposed improvements to the Hammond Wood WWTP require the installation of a new electrical service. A site meeting with a representative of Pennyrile Electric revealed that a new underground electric service can be installed along the eastern plant site boundary to a new pad mount transformer located at the center of the site – see Exhibit No. 1. The electrical improvements are proposed to include a 4,000 amp, 277/400 volt, three phase, four wire service entrance rated automatic transfer switch and main switchboard.

The Hammond Wood WWTP should be equipped with a diesel powered standby electrical generator complete with sub-base

mounted fuel tank and automatic transfer switch. At a minimum, the generator should be sized to power the necessary components of the plant required to meet the effluent limitation set by the KPDES permit. A 2,000 kW generator would be required to power all unit processes except for biosolids processing since the sludge treatment and production can be suspended during short duration power failures. A 2,500 kW generator will be required to power all proposed facilities at the plant, including biosolids, based on preliminary sizing information. The generator fuel tank should be sized to provide enough fuel to provide 24 hour generator run time at full load capacity which should result in extended run times under normal loading. The generator should be programed to start once per week to exercise itself ensuring it will run properly when needed.

The Supervisory Control and Data Acquisition (SCADA) System provided as part of the plant should provide battery backup power supplies to prevent the control system from experiencing a short power failure during the time delay from power failure until generator startup and load carry. The SCADA system should also contain starting sequences for major electrical loads to be applied to the generator upon generator startup. This concept minimizes the chance that the control system will experience a power failure and also that the heavy startup loads from major electrical devices do not load the generator simultaneously.

12. Biosolids Processing and Disposal

a. General

The biosolids wasted from the biological process are stored in one of two aerated sludge holding tanks prior to dewatering with a belt press and disposal by land application or to a local landfill. Although this process is the lowest cost alternative

when compared with more sustainable processes, it requires that ultimate disposal take place by others. This situation creates uncertainty and risk for the HWEA due to the fact that a property owner can simply refuse to accept biosolids with short notice. The only reasonable alternative short term disposal under these conditions is to dispose of the Class B biosolids in a landfill capable of accepting municipal waste.

An alternative to land application or landfilling of Class B biosolids is to treat the biosolids to Class "A" Exceptional Quality (EQ) standards. The reporting and testing requirements are significantly reduced when producing EQ biosolids and the final product is much less odorous and typically dryer than Class B biosolids. The increased acceptability of the final product lend it to distribution to the landscaping industry and also as a fertilizer and soil amending agent to City parks and private properties. Once the biosolids meet the EQ standards, there are very little restrictions related to their application and the reduced volatile suspended solids reduce odors related to long term storage of the product. The reduced testing requirements, ease of long term storage, and acceptability by the public make EQ biosolids a better long term solution for municipal wastewater treatment plants.

<u>Alternative No. 1 - Gas Drying to Produce Class "A" Exceptional Quality Biosolids.</u> These improvements consist of two 750,000 gallon prestressed concrete aerated sludge holding tanks and associated blowers, variable speed positive displacement sludge pumps, two sludge dewatering presses, a natural gas dryer, and associated support and storage buildings. The forecast sludge production for the Year 2035 consists of 8,120 pounds per day of dry biosolids which

equates to approximately 100,000 gallons per day at an approximate clarifier underflow concentration of one percent solids. Negating any volatile solids reduction in the aerated sludge holding tanks creates a volume of 775 cubic feet of biosolids per day leaving the dewatering presses at 15 percent solids. The gas dryer should achieve a solids concentration of a minimum of 75 percent which results in production approximately five cubic yards of material per day. On a yearly basis, the volume of biosolids produced by the dryer would be approximately 1,830 cubic yards which is approximately 200 dump truck loads per year. The final product would meet Class A EQ Biosolids requirements and be suitable for application to city parks, private property, and agricultural properties. Dried biosolids are typically in pellet form which lend it to acceptance and handling by the public.

The capital improvements of Alternative No. 1 are estimated to cost $7,600,000 as shown on Cost Estimate No. B-1 and have an estimated 20 year operation cost present worth of between $4,150,000 and $7,250,000. The total estimated project cost ranges between $11,750,000 and $14,850,000. The wide range of estimated operation cost for this alternative is necessary due to the uncertain costs of natural gas. The cost of natural gas used for this evaluation ranged from $0.60/therm to $1.50/therm and although the future of natural gas production in the United States appears virtually unlimited, government regulatory action related to the fracking process could greatly affect the cost of extraction and production. This situation creates more risk in pursing this alternative.

Alternative No. 2 - Class A Autothermal Thermophilic Aerobic Digestion (ATAD) to produce Class "A" Exceptional Quality Biosolids. These improvements consist of two 750,000 gallon prestressed concrete aerated sludge holding tanks and associated blowers, variable speed positive displacement sludge pumps, one sludge thickener, ATAD unit, two final positive displacement sludge pumps, two sludge dewatering presses, and associated support and storage buildings. The ATAD process generally consists of introducing five percent thickened biosolids to the aerated and mixed ATAD unit. The aerobic biological activity of the thickened sludge creates heat which increases the biological conversion of volatile suspended solids. Next, the sludge enters the nitrification/denitrification reactor which converts ammonia to nitrate and then to nitrogen gas and also cools the biosolids prior to final dewatering. The result is a liquid Class A sludge that can be dewatered by a belt press and disposed of via land application. Due to the low volatile solids of the product, it can be stored for extended periods so that it can be land applied during suitable periods unlike Class B biosolids. The estimated quantity of final biosolids produced by this process is approximately 9 cubic yards per day at approximate 30 percent moisture content. The estimated volatile suspended solids destruction is approximately 60 percent.

The capital improvements of Alternative No. 2 are estimated to cost $9,100,000 as shown on Cost Estimate No. B-2 and have an estimated 20 year operation cost present worth of $12,500,000.

Alternative No. 3 - Solar Drying to Produce Class "A" Exceptional Quality Biosolids. These improvements consist of two 750,000 gallon prestressed concrete aerated sludge holding tanks and associated blowers, variable speed positive displacement sludge pumps, two positive displacement sludge pumps, two sludge dewatering presses, solar drying units, and associated support and storage buildings. The dewatered solids produced by the sludge presses are distributed to the solar drying units which consist of a six greenhouse style units with PLC controlled fans which maintain the desired temperature and humidity for optimum sludge drying depending on the time of year. The dewatered biosolids can be dumped in the units at an average depth of 12 to 16 inches and will be automatically distributed and mixed by a PLC controlled mole which continually turns and plows the biosolids. The solids content of the sludge is increased by evaporation from approximately 15 percent to 75 percent after approximately four weeks drying time. The estimated volume of final Class "A" biosolids is estimated to be approximately five cubic yards per day which is similar to the volume produced using a gas dryer.

The capital improvements of Alternative No. 3 are estimated to cost $10,100,000 as shown on Cost Estimate No. B-3 and have an estimated 20 year operation cost present worth of $12,050,000.

Alternative No. 4 – Land Farming to Produce Class "B" Biosolids. These improvements consist of two 1,250,000 gallon prestressed concrete aerated sludge holding tanks and associated blowers, variable speed positive displacement sludge pumps, two positive displacement sludge pumps, two

sludge dewatering presses, a 400 acre dedicated land application farm and associated support and storage. The process would consist of aerobic digestion of the biosolids in accordance with the Class "B" biosolids regulation, dewatering and then land application on a dedicated land farm owned by the HWEA. Due to the high organic content of Class "B" biosolids, odor is a concern regarding storage. As a result, during winter and other wet times that prohibits the use of equipment on the land farm, the dewatered biosolids will probably need to be hauled to a landfill capable of accepting municipal waste. The volume of dewatered biosolids is estimated to be approximately 21 cubic yards per day. The testing and reporting requirements for meeting the Class "B" part of the 40CFR503 regulations are much more onerous than those required for Class "A" biosolids. In addition, the utility will need to follow fairly strict land application and use policies to prevent discharge of biosolids to waterways or other restricted areas.

The capital improvements of Alternative No. 4 are estimated to cost $7,100,000 as shown on Cost Estimate No. B-4 and have an estimated 20 year operation cost present worth of $12,050,000 based upon land application eight months per year and landfilling four months per year during the winter.

C. Alternative No. 1A – Phased Approach to Implementation of Alternative No. 1

Alternative No. 1A consists of implementing Alternative No. 1 – Use of Oxidation Ditch Technology and Continued Discharge to North Fork Little River to two phases. The first phase consists of the construction of the following unit processes:

1. New River Crossing
2. New Main Sewage Pumping Station
3. New Headworks
4. New Electrical Building and Standby Power
5. One new 750,000 gallon Prestressed Concrete Sludge Holding Tank
6. Sludge Blowers, Pumps and one new belt press

Construction of the Phase I improvements will replace the most maintenance intensive unit processes, which consist of the screw pumps and headworks, allow for expanded sludge holding and processing, and relocate the electrical feed which allows space for the construction of future Final Clarifier No. 3. The total estimated project cost of the Phase I improvements is $12,610,000 as shown on Cost Estimate No. 1A.

The Phase II improvements consist of the construction of the following unit processes:

1. Anaerobic Phosphorous Release Tank
2. Renovation of Oxidation Ditch Nos. 1 and 2
3. New Oxidation Ditch No. 3
4. New Final Clarifier No. 3
5. New Blower Building
6. Return and Waste Activated Sludge Pumping Station Modifications
7. Ultraviolet disinfection and re-use
8. New Operations Building
9. One new 750,000 gallon Prestressed Concrete Sludge Holding Tank
10. One new belt press
11. New Solar Drying Biosolids Processing Facilities

The relocation of the electrical service as part of the Phase I improvements will allow new Oxidation Ditch No. 3 and Final Clarifier No. 3 to proceed at the start of construction of Phase II. The Phase II improvements are estimated to cost $22,900,000 as shown on Cost Estimate 1B.

The advantage of phasing the plant improvements include a quicker delivery of replacement unit process for existing unit processes that are causing operating problems. In addition, the addition of biological treatment units at a later date as growth requires will delay capital expenditures.

The advantage to implementing the project in one phase includes lower overall project costs due to better contractor prices for one contract and less administration costs due to a quicker project delivery in lieu of two phases.

D. Alternative No. 2 – Use of Oxidation Ditch Technology and Discharge to Lake Barkley

1. General

Alternative No. 2 consists of expanding the Hammond Wood WWTP to discharge to River Mile 63 of Lake Barkley (Cumberland River) at an estimated total project cost of $70,400,000 as shown on Cost Estimate No. 2. The expansion is proposed to increase the Hammond Wood WWTP capacity to treat the design flows and waste loads described in Section VII. Forecasts of Flows and Waste Loads in the Planning Areas. Due to the preliminary comparative nature of this alternative, a waste load allocation was not requested since this alternative is eliminated based on price alone. The proposed plant work consists of the construction of one oxidation ditch and final clarifier as part of this project and allows for the addition of oxidation ditch no. 4 and final clarifier no. 4 as required in the future. During the design phase of the proposed project, the necessary piping and connections should be installed so that plant site disturbance is minimized during the construction of oxidation ditch no. 4 and final clarifier no. 4. In addition, the proposed work consists of the construction of approximately 145,000 L.F. of 36-inch effluent force main from the Hammond Wood WWTP to the outfall into Lake Barkley. The improvements consist of the following unit processes:

a. New raw sewage pumping station including river crossing

b. New headworks with fine screening and grit removal

c. Renovation of two existing oxidation ditches

d. One new oxidation ditch

e. One new 110 foot diameter final clarifier

f. Renovation of the raw and waste activated sludge pumping station

g. New ultraviolet disinfection facilities

h. New 10 MG prestressed concrete effluent holding tank

i. New 20 MGD effluent pumping station

j. 145,000 L. F. of 36-inch effluent force main and Lake Barkley Outfall

k. Two new 750,000 gallon aerated sludge holding tanks

l. Three new sludge transfer pumps

m. Two new sludge dewatering presses

n. Six new 42' by 265' solar drying chambers with concrete floors and push walls

o. New operations and maintenance building

p. New diesel powered standby generator and automatic transfer switch

q. Associated site piping and site development improvements

No tertiary treatment is expected to be required for this alternative since it is unlikely that nutrient limitations would be required in the KPDES permit for discharge to Lake Barkley.

The Hammond Wood WWTP improvements required as part of this alternative are similar in scope to the improvements required for Alternative No. 1 with the following exceptions:

1. Anaerobic reactor is not required10 MG effluent holding tank is required
2. 20 MGD effluent pumping station is required

3. 145,000 L.F. of 36-inch effluent force main is required with outfall to Lake Barkley

In lieu of repeating the descriptions of the unit processes which are common to both alternatives, please refer to the unit process descriptions in Alternative No. 1 described hereinbefore with the exception of the effluent holding tank and effluent pumping station which are described hereinafter.

2. 20 MGD Effluent Pumping Station

The estimated peak flow to the Hammond Wood WWTP is estimated to be approximately 28 MGD although the peak flow depends largely on outside factors such as existing pipeline condition, leakage rates, and manhole lid restraints. In lieu of designing an effluent pumping station that can pump the entire maximum flow rate of the renovated Hammond Wood WWTP, it is more cost effective to design the effluent pumping station with effluent storage for the peak flow days.

The proposed effluent pumping station is proposed to be constructed adjacent to the proposed ultraviolet disinfection facilities and utilize vertical turbine style pumps. The station is proposed to utilize three pumps for transportation of effluent to Lake Barkley with two pumps operating at full speed producing 20 MGD together (10 MGD each) which allows the third pump to function as a standby pump although their run time should be kept similar by using alternation in the control system. Two additional pumps are proposed in the effluent pumping station to transfer effluent to the proposed 10 MG prestressed concrete effluent holding tank located adjacent to the Hammond Wood WWTP site. As the plant flow exceeds 20 MGD, one of the two diversion pumps will transfer effluent to the 10 MG tank and as the level in the effluent wetwell drops, the tank will automatically drain back to the wetwell which optimizes the pump and storage system.

The three main pumps should be equipped with variable frequency drives to prevent cycling. Due to the infrequent nature of operation, the two diversion pumps can be equipped with standard reduced voltage starters.

The elevation along the proposed route which is shown on Exhibit No. 2 varies between 400 and 630 feet above mean sea level until it drops off into the Cumberland River valley. The total force main length is approximately 145,000 feet and the high point of elevation 630 occurs at approximate station 1210+00 with station 0+00 starting at the plant. Using a low water level of 490 in the effluent pumping station the static head is approximately 140 feet. The friction head of a 36-inch line from the control point of 121,000 feet calculates to be approximately 190 feet which yields a total dynamic head of 330 feet. Using two pumps to transfer the flow results in individual pump operating points of 10 MGD (7,000 GPM) at 330 feet TDH which requires an approximate motor size of 800 HP. As a result, three 800 HP primary effluent pumps would be required in the effluent pumping station.

During events that the flow to the Hammond Wood WWTP exceeds the 20 MGD capacity of the 36-inch effluent force main, the excess flow is proposed to be pumped into a 10 MG Effluent Holding Tank located adjacent to the site. The effluent pumping station should contain two identical pumps each having a maximum capacity of 7,000 GPM which is 10 MGD. Assuming a static head of 50 feet from the water surface of the effluent pumping station wetwell to the top of the 10 MG tank, and approximately 1,000 feet of 20-inch diversion force main yields a total dynamic head of 60 feet. The design condition of 7,000 GPM at 60 feet TDH yields an approximate motor horsepower of 150 HP. As a result, two 150 HP effluent diversion pumps would be required. For unusual storm events requiring more

than 24 hour storage which would fill the inflow holding tank, it is recommended the HWEA obtain an intermittent discharge permit to the North Fork Little River which is only valid when 20 MGD is being pumped to Lake Barkley and the 10 MG effluent tank is full.

3. 10 MG Effluent Holding Tank

During periods that the effluent flow from the Hammond Wood WWTP exceeds 20 MGD, the remainder is proposed to be pumped into a 10 MG effluent holding tank and stored until it can be pumped to Lake Barkley. The concept consists of using the two 150 HP effluent diversion pumps to pump the treated effluent into the new tank at times when the effluent wetwell level continues to rise even though 20 MGD is being pumped to Lake Barkley. The excess effluent is proposed to be stored in the new tank until the effluent flow from the Hammond Wood WWTP falls below 20 MGD which will cause the diversion pumps to stop pumping and the level in the effluent wetwell will begin to drop. At some predetermined point, the control system will cause a valve on the tank return flow line to open and automatically drain the contents of the tank into the effluent wetwell. This concept allows the tank to empty automatically which maximizes the amount of effluent that can be transported to Lake Barkley over a system that requires a manual valve operation.

The tank is propose to be a prestressed wire wound concrete tank with an approximate diameter of 230 feet and a side water depth of 32 feet. Due to low concerns for odor, the tank can be constructed with an open top.

4. Effluent Force Main

The effluent force main is proposed to consist of 145,000 L.F. of 36-inch pipe as shown on Exhibit No. 2 in the Appendix of this report.

The pipeline will be able to transport flows up to 20 MGD at a velocity of approximately 4.4 feet per second. During periods of low flow, the velocity will fall to approximately 0.8 feet per second which should not be a problem considering the relatively low solids content in the effluent from the Hammond Wood WWTP. The optimum pipe material for this pipeline is ductile iron pipe due to its superior resistance to poor soil or backfill conditions along with the high pressure resistance this material offers.

E. Alternative No. 3 – Use of Sequencing Batch Reactor Technology and Discharge to North Fork Little River

1. General

Alternative No. 3 consists of the construction of a new sequencing batch reactor type wastewater treatment plant and continued discharge to the North Fork Little River at an estimated total project cost of $$39,300,000 as shown on Cost Estimate No. 3. The new plant is proposed to be of sufficient capacity to treat the design flows and waste loads described in Section VII. Forecasts of Flows and Waste Loads in the Planning Areas. The improvements consist of the following unit processes:

a. New raw sewage pumping station including river crossing
b. New headworks with fine screening and grit removal
c. New anaerobic reactor related to phosphorous removal
d. New sequencing batch reactor basins
e. New blower building
f. New flow equalization tank
g. New waste activated sludge pumping station
h. New ultraviolet disinfection facilities
i. Two new 750,000 gallon aerated sludge holding tanks
j. Three new sludge pumps

k. Two new sludge dewatering presses

l. Six new 42' by 265' solar drying chambers with concrete floors and push walls

m. New operations and maintenance building

n. New diesel powered standby generator and automatic transfer switch

o. Associated site piping and site development improvements

The Hammond Wood WWTP improvements required as part of this alternative are similar in scope to the improvements required for Alternative No. 1 in respect to the following unit processes:

a. New raw sewage pumping station including river crossing

b. New headworks with fine screening and grit removal

c. New anaerobic reactor related to phosphorous removal

d. New blower building

e. New flow equalization tank

f. New ultraviolet disinfection facilities

g. Two new 750,000 gallon aerated sludge holding tanks

h. Three new sludge pumps

i. Two new sludge dewatering presses

j. Six new 42' by 265' solar drying chambers with concrete floors and push walls

k. New operations and maintenance building

l. New diesel powered standby generator and automatic transfer switch

m. Associated site piping and site development improvements

As a result, the description of the unit processes proposed herein is limited to the sequencing batch reactors, effluent flow equalization tank, and waste sludge pumping station.

2. Sequencing Batch Reactors (SBR)

The screened and degritted raw sewage is proposed to be pumped to the SBR basins through a 36-inch force main pipeline. The discharge of raw sewage to one of three SBR basins is controlled by automatically operated influent valves which allow one of the three basins to accept raw sewage while the other basins are at differing stages of treatment. SBR technology achieves treatment through batch type treatment consisting of the following cycles: (1) raw sewage fill, (2) aeration, (3) settling, and (4) decant. Continuous influent flow can be accepted since one of the six basins proposed as part of this project will always be in the “fill” cycle.

During the fill cycle, an electronically operated influent valve opens allowing sewage to enter the basin until the level in the basin reaches a preset level and then the valve closes. The control system will initiate influent valve opening at the next basin scheduled for operation so that it can begin its fill cycle. After the influent valve closes, the control system starts the blowers so that the aeration cycle can begin. If nutrient removal is desired, the aeration system will remain off, and instead, a series of mixers will begin operation to allow the basin to become anaerobic or anoxic for the desired phosphorous or nitrate removal. The SBR process offers flexibility regarding nutrient removal due to its ability to combine multiple mix and aeration cycles to which can be modified to address the specific flows and nutrient waste loads.

After preset time intervals, the mixers will stop and then aeration will begin for BOD removal. After a secondary preset time interval has elapsed, the aeration cycle will stop and the decant or settling cycle will begin for a present time. After sufficient time, the settling cycle will end and the basin will begin the decant cycle which consists of

the clear effluent being pulled from the upper depth of the lagoon and discharged to downstream facilities. Decanting is usually accomplished with a floating mechanism with multiple takeoff orifices allowing for a homogenous removal of the top layer of supernatant which prevents the discharge of the settled sludge to the downstream facilities.

3. Effluent Flow Equalization and Pumping

Effluent from the SBR process discharges in batches in lieu of the continuous discharge associated with most wastewater treatment processes. The batch type discharge can present some challenges with the capacity of downstream treatment structures if flow equalization is not utilized. Flow equalization allows the downstream treatment facilities to be designed at a peak flow equal to the peak capacity of the plant in lieu of the decant flow which can be much higher.

The effluent from the SBR is proposed to discharge to a new flow equalization tank with a capacity of approximately 1.5 million gallons. The tank is proposed to be equipped with a series of orifice plates that distribute the flow to the UV disinfection system and the North Fork Little River in somewhat continuous flow in lieu of in batches.

4. Waste Sludge Pumping Station

The new SBR process will require a new waste sludge pumping station to transfer excess mixed liquor to the proposed new sludge holding tanks. Using common wall construction the waste sludge pumping station can be constructed so that it equally removes excess mixed liquor from each of the three SBR basins to maintain a similar mixed liquor concentration in each basin. The station is proposed to consist of three submersible waste sludge pumps

equipped with a common effluent flow meter that meters the volume of waste sludge pumped to the sludge holding tanks on a daily basis.

F. Alternative No. 3 – No Action Alternative

Alternative No. 3 consists of the "No Action" alternative which speaks for itself, do nothing. Although this alternative may have lowest capital cost of the three alternatives, several factors make this the least desirable alternative. These factors include upcoming nutrient removal requirements in the KPDES permit, equipment that has outlived its useful life, and the potential for sanitary sewer overflows due to the wet weather capacity of the Hammond Wood WWTP.

The existing receiving stream, North Fork Little River, is listed on the 2012 303(d) list for several impairments including nutrients and organic enrichment. The impairment for nutrients will likely lead to a total phosphorous limitation in the KPDES permit issued for the Hammond Wood WWTP. The 1.0 mg/l total phosphorous limit in the April 25, 2014 waste load allocation letter will be below the treatment capacity of the existing plant which will require expansion and renovation.

A large amount of treatment equipment at the Hammond Wood WWTP was installed during the last major project which was constructed in 1995. The majority of this equipment has outlived its useful life and requires constant operation and maintenance attention. The age and condition of this equipment could lead to total failure which could lead to a violation of the KPDES permit. Another factor related to the age of the equipment is the technological advances that have occurred since the last renovation. These advances have led to the manufacturing of equipment that is more efficient are removing pollutants from the wastewater which creates energy savings and a cleaner effluent.

The firm wet weather capacity of the existing Hammond Wood WWTP is approximately 12.3 MGD according to information published with the original plans of this facility. During excessive rain events, the flow to the Hammond Wood WWTP can exceed the firm capacity of the plant which could cause a sanitary sewer overflow upstream of the plant.

Implementation of "Alternative No. 4 – No Action" will result in the Hammond Wood WWTP being unable to meet future KPDES limitations. In addition, the existing operation and maintenance costs will increase due to the age of the existing equipment. As a result, implementation of Alternative No. 4 – No Action is not recommended.

G. Alternative Analysis

1. Evaluation of Financial Value

A present worth life cycle cost analysis was performed using a rate of 3 percent. The cost of the alternatives considered herein are summarized in Table VIII-1 as follows:

TABLE NO. VIII-1
FINANCIAL ALTERNATIVE ANALYSIS
HAMMOND WOOD WWTP

Present Worth Item	Alternative No. 1	Alternative No. 2	Alternative No. 3
Capital Cost	$35,250,000	$67,100,000	$39,300,000
Operation & Maintenance	$17,850,000	$23,800,000	$18,350,000
Salvage Value	($155,000)	($155,000)	($155,000)
Equipment Replacement	$950,000	$1,350,000	$1,050,000
Total Present Worth	$53,895,000	$92,095,000	$58,545,000
Ranking	**1**	**3**	**2**

1 = Most Favorable

2. Evaluation of Non-Financial Value

The following table depicts the ranking non-financial components of the alternatives:

TABLE NO. VIII-2
NON-FINANCIAL ALTERNATIVE ANALYSIS
HAMMOND WOOD WWTP

Component	Alternative No. 1	Alternative No. 2	Alternative No. 3	Alternative No. 4
Reliability	1	2	1	3
Ability to Expand	1	2	1	3
Biosolids Handling	1	1	1	3
Environmental Impact	1	2	2	3
Regulatory Compliance	1	1	1	3
Constructability	2	3	2	1
Nutrient Removal	1	2	1	3
Carbon Footprint	2	3	2	1
Odor Management	1	1	2	3
Ranking	**11**	**17**	**13**	**23**

1 = Most Favorable, 3 = Least Favorable

3. Recommended Alternative

The financial and non-financial comparisons in the preceding Tables indicate that the most cost effective and overall best solution is to implement Alternative No. 1 – Use of Oxidation Ditch Technology and Continued Discharge to the Little River which general consists of renovation of the existing facility, increasing the biological and hydraulic capacity, biosolids processing capacity, and nutrient removal capacity. The project can be implemented in two phases as described hereinbefore.

The implementation of Alternative No. 1 will allow the Hammond Wood WWTP to treat the forecast loading increased due to growth at the current effluent limits established by the Division of Water.

IX. Cross Cutter Correspondence and Mitigation

1. General

Cross cutter letters were sent to the several agencies for the Hammond Wood WWTP renovation. Cross cutter letters for future projects which have a ten year timeline were not requested due to their preliminary nature. When the final scope and alignment of these projects are determined along with financing source, the proper agencies should be contacted. HWEA is committed to contacting the proper agencies for future projects as indicated in the letter found at the end of Section IX following Page IX-2.

2. Kentucky Department of Fish and Wildlife Resources (KDFWR)

The response letter from this agency stated that the federally listed Gray Myotis, state listed Smallscale Darter, and state listed Mountain Creekshell are known to exist in the vicinity of the project site, although KDFWR does not expect impacts to the listed species due to the location and nature of the project. Further concerns by the KDFWR include minimization of sediment discharge to the North Fork Little River during construction activities. This will be accomplished by the use of silt fence and hay bales in accordance with a proposed Stormwater Pollution Prevention Plan which will be required prior to beginning construction activities.

3. Natural Resources Conservation Service (NRCS)

The NRCS has no concerns since the plant construction will take place on previously disturbed property or prior converted farmlands.

4. United States Army Corps of Engineers (USACE)

The response letter from USACE stated no specific concerns but requests that the proper permits be obtained from the USACE prior to beginning construction. This permit would consist of a USACE Section 404 permit for the crossing of the North Fork Little River.

5. United States Fish and Wildlife Service (USFW)

The USFW commented that the following federally listed species have the potential to occur in the project area:

- Gray Bat
- Indiana Bat
- Northern Long Eared Bat
- Slabside Pearlymussel
- Fluted Kidneyshell
- Rabbitsfoot

USFW recommends that the site be surveyed for caves, rock shelters, and underground mines prior to construction. There are no caves, rock shelters, or underground mines that will be impacted by this project since it is a previously disturbed site. The potential exists for trees to be removed along the bank of the North Fork Little River. It is proposed that a habitat assessment be conducted to determine the presence of species stated in the USFW letter prior to construction. In addition, it is recommended a mussel survey be undertaken in the vicinity of the North Fork Little River Crossing prior to construction to verify the presence of species listed in the USFW letter.

6. Kentucky State Historic Preservation Office (KSHPO)

The KSHPO has no objections to the proposed project since it is taking place on a previously disturbed site.

Copies of the response letters from the aforementioned agencies are included in Appendix G.

Hopkinsville Water Environment Authority

401 East 9th Street • P.O. Box 628 • Hopkinsville, Kentucky 42241-0628

Derrick W. Watson
President & CEO

Phone (270) 887-4246
Fax (270) 887-4244

HWEA

January 08, 2015

To All Interested Parties

RE: Potential Water / Sewer Projects
Hopkinsville Water Environment Authority

Sir or Madam:

The Hopkinsville Water Environment Authority (HWEA) is committed to full compliance with the crosscutter agency requirements. Detailed project descriptions with location maps will be sent to each of the federal and state agencies listed below as necessary to solicit their input on the potential adverse impact of each project on historical sites, endangered species, wetlands, and prime farmland. HWEA will not initiate project construction for the project(s) described in the Facilities Plan until clearance letters from each of the following agencies have been received:

- ✓ Kentucky Heritage Council
- ✓ Kentucky Department of Fish and Wildlife Resources
- ✓ U.S. Fish and Wildlife Services
- ✓ U.S. Army Corps of Engineers
- ✓ Natural Resources Conservation Service

Thank you for the opportunity to present this information. If you have any questions or comments, please do not hesitate to contact me at T # 270-887-4246 or dwatson@hwea-ky.com.

Sincerely,

Derrick W. Watson
President & CEO

cc: Greg Davenport, JR Wauford & Company, Inc.
c:\file\hwea\ESA\ESA-2013-A\KYDOW\01082015.LCM.docx

X. Evaluation of Recommended Regional Facility Plan

1. General

The primary purpose of this Regional Facility Plan is to present information relative to the expansion and renovation of the Hammond Wood WWTP. Secondary projects are listed to give HWEA a priority of future collection system projects although those projects are not proposed to be financed with a State Revolving Loan Fund at this time. The renovation of the Hammond Wood WWTP is proposed to be funded with State Revolving Loan Funds which is a program that the HWEA has worked with on past projects with good success.

2. Environmental Impacts

The expansion and renovation of the Hammond Wood WWTP is proposed to be conducted entirely on the site of the existing plant. This site has been previously disturbed by wastewater treatment plant projects in 1980 and 1995. There are no known endangered species or archaeological or historical sites located on the project site. The disturbance to surface water quality will be minimized by erosion control measures required as part of the construction including the use of silt fence and other erosion control measures. The work includes a gravity sewer crossing and new effluent outfall pipe at the North Fork Little River which will require the use of open-cut installation. The proper state and federal permits will be obtained prior to beginning construction work which is estimated to take less than a week at each location. Local air quality may be mildly affected by the use of construction equipment which will occur only during the construction phase. There will be no impact upon wetlands, water supply, prime farmland, or any other environmentally sensitive areas. After the new plant is in operation, the quality of the effluent discharged to the North Fork Little River will be improved which will contribute to an overall increase in water quality in the receiving stream. A very minor portion of the work is proposed to

permanently impact the 100 year flood plain of the North Fork Little River; any required permits will be obtained prior to the beginning of construction.

3. Institutional Requirements

There are no institutional requirements necessary prior to the implementation of this project as it will be wholly owned, financed and operated by the HWEA. The funding plan of the HWEA consists of obtaining funds from the State Revolving Fund and no other sources.

4. Funding Source

The rate increases recommended herein relate to the implementation of Alternative No. 1 in a phased approach. The estimated construction cost of Phase I is $12,610,000 and the preliminary estimated rate increases are shown in Table X-1 as follows:

TABLE X-1
EXISTING AND PROPOSED USE RATES
PHASE I – HAMMOND WOOD WWTP EXPANSION

Sewer Usage	HWEA		Pembroke	
	Existing	Proposed	Existing	Proposed
Minimum bill: 300 cubic feet (C.F.) or less	$12.42	$14.75	$15.63	$17.96
All over 300 cubic feet (C.F.)	$4.14	$4.92	$4.59	$5.37

The rates shown are preliminary in nature and any future rate increases will be calculated considering the previous year's operating costs at the time the project is initiated.

5. Project Schedule

The project schedule is as follows:

Final Approval of Regional Facility Plan	June 2015
Begin Detailed Design	July 2015
Submit Plans & Specifications to KDOW	June 2016

1983
January 2015

Begin Construction	January 2018
Complete Construction	January 2010
Project Closeout	April 2020

XI. Documentation and Public Participation

The HWEA will conduct a public meeting in compliance with the requirements of KDOW for this project. The results and comments from this meeting will be submitted to KDOW in a revised document.

****

Section 12: Regional Facility Plan Completeness Checklist and Forms

Requirements: Two (2) hard copies, one certified by a professional engineer licensed in Kentucky and one (1) non-certified digital copy of the regional facility plan and the planning area shapefile on a Compact Disc (CD) shall be submitted to the Cabinet. This completeness checklist should be completed and submitted with each regional facility plan.

Regional Planning Agency Name: Hopkinsville Water Environment Authority

Date: November 12, 2014

		PAGE #
SECTION 1		
REGIONAL FACILITY PLAN SUMMARY- This section shall provide a brief summary of the information provided in the facility plan, including the following:		1 - 2
1.	Purpose of the plan and major problems evaluated in the plan.	1 - 2
2.	Recommended alternative chosen to remediate or correct the problems and/or serve the area of need identified in the plan. Also, include any institutional arrangements necessary to implement the recommended alternative(s).	3 - 5
3.	Estimated cost of implementing the proposed plan (including user fees) and the proposed funding method to be used.	3
4.	Planning agency commitments necessary to implement the plan.	2 - 3
5.	Schedule of implementation for projects.	3
SECTION 2		
STATEMENT OF PURPOSE AND NEED- This section shall contain a brief description of the purpose and need for a submitting the facility plan.		5 - 6
SECTION 3		
PHYSICAL CHARACTERISTICS OF THE PLANNING AREA- This section shall delineate the planning area boundaries and describe key topographic, geographic and pertinent natural or man-made features of the area. Digital or electronic submission of the planning area boundary shapefile in a standard GIS format shall also be included. This section shall also include the following maps:		7 - 9
1.	One (1) up-to-date map, suitable for photocopying, indicate the planning area boundary, service area boundary, watershed boundaries, county lines, populated places, cities and/or towns and project areas or proposed planning period phases.	8
2.	One (1) up-to-date map, suitable for photocopying, include locations of wastewater treatment facilities (including package treatment plants), discharge location(s), collection lines (gravity, force main, interceptors), pump stations, public drinking water intake points and groundwater supply areas [Source Water Area Protection Plans (SWAPP) and/or Wellhead Protection Areas (WHPA)].	8
3.	One (1) seven and one-half (7 ½) minute USGS topographic map including the location of wetlands, delineation of the 100-year floodplain, surface water(s), and topography.	8

4.	If available, a local planning and zoning land use map.	8
SECTION 4		
SOCIOECONOMIC CHARACTERISTICS OF THE PLANNING AREA- The following characteristics of the planning area shall be discussed:		9 - 14
1.	Historical, current, and projected population in the planning area including wastewater contributions from industrial and commercial sources.	9 - 12
2.	Current and projected population in the existing service area and unsewered parts of the planning area	11
3.	Economic or social benefit to the affected community	12
SECTION 5		
EXISTING ENVIRONMENT IN THE PLANNING AREA- Describe existing physical, biological, cultural, and other resource features within the planning area with an emphasis on those that may be impacted by the proposed plan or projects, including the following:		14 - 19
1.	Physical features such as surface and groundwater quality, water sources and supply, wetlands, lakes, streams, air pollution, floodplains, soils, geology, and topography	14 - 15
2.	Biological: Identify plant and animal communities in the planning area with an emphasis upon endangered and threatened species likely to be impacted	15 - 17
3.	Cultural: Describe archaeological and historical resources that may be affected by the proposed project	17 - 18
4.	Other Resource Features such as national and state parks, recreational areas, USDA Designated Important Farmland, and any other applicable environmentally sensitive areas	18 - 19
SECTION 6		
EXISTING WASTEWATER SYSTEM- This section shall be prepared by a Professional Engineer licensed in Kentucky. A description of the existing facilities within the planning area shall include the following:		19 - 29
1.	On-site systems in the planning area	20 - 21
2.	Physical condition of the existing wastewater treatment plant(s) including the type, age, design capacity, process units, peak and average wastewater flows, current discharge permit limits, schematic layout of treatment plant. Include a narrative description of the capacity of the treatment plant to meet reliability and redundancy requirements as outlined in regulation 401 KAR 5:005, Section 13.	23 - 29
3.	Existing collection and conveyance system and its condition	19 - 24
4.	Existing biosolids disposal method	28 - 29
5.	Existing operation, maintenance and compliance issues	29 - 30
SECTION 7		
FORECASTS OF FLOWS AND WASTE LOADS IN THE PLANNING AREA- This section shall be prepared by a professional engineer licensed in Kentucky and shall include:		30 - 33
1.	Current and projected commercial, industrial and residential growth for the proposed planning period	31
2.	A copy of the waste load allocation (WLA) issued by the DOW for new or expanded treatment plant projects	Appendix C

SECTION 8		
EVALUATION OF ALTERNATIVES- This section shall be prepared by a professional engineer licensed in Kentucky and include an assessment of alternatives to determine the appropriate facilities that will meet the wastewater needs of the planning area and provide benefits that are cost-effective and environmentally sound. The section shall include:		34 - 62
1.	No-action alternative	61 - 62
2.	Optimization of existing facilities	34 - 56
3.	Regionalization	34 - 56
4.	Other alternatives	56 - 60
5.	Detailed cost analysis along with 20 year present worth analysis for each alternative	CE B-1 - 4
6.	Recommended alternative	CE-1
SECTION 9		
CROSS-CUTTER CORRESPONDENCE AND MITIGATION- Each facility plan shall include cross-cutter correspondences to and from each agency related to the following four environmental and cultural concerns:		64 - 66
1.	Threatened and Endangered Species: The U.S. Fish and Wildlife Service- Kentucky Ecological Services Field Station and the Kentucky Department of Fish and Wildlife Resources	64 - 65
2.	Historical Resources: The Kentucky Heritage Council State Historic Preservation Office	66
3.	Aquatic Resources: The US. Army Corps of Engineers (Louisville, Nashville, or Huntington Districts).	65
4.	Agricultural Resources: The local office of the Natural Resources Conservation Service (NRCS) or USDA Service Center	65
SECTION 10		
EVAULATION OF RECOMMENDED REGIONAL FACILITY PLAN- This section of the facility plan shall summarize the critical components of the recommended plan.		66 - 67
1.	Environmental impacts	66 - 67
2.	Institutional structure	67
3.	Funding plan	67
4.	Current and projected residential user charge rate based on 4,000 gallon usage per month	67
5.	Implementation schedule	67
SECTION 11		
DOCUMENTATION OF PUBLIC PARTICIPATION- The section shall include a copy of the newspaper advertisement/proof of publication, attendance sheet, and public comments.		68

Unit Process Design Criteria Form

Unit Process	Number of Units[1]	Flow per Unit (MGD) *	Design Criteria[2]
Influent Pumping	3	3 / 14	TenState
Screening	3	3 / 14	TenState
Grit Removal	2	4.5 / 14	TenState
Primary Clarification	N/A	N/A	N/A
Biological Process	3	3 / 9.3	TenState
Chemical Phosphorus Removal	3	3	TenState
Final Clarification	3	3 / 9.3	TenState
Disinfection	3	3 / 9.3	TenState
RAS/WAS Pumping	3	3 / 6	TenState
Sludge Treatment	2	N/A	TenState
Sludge Dewatering	2	N/A	TenState

1*The number of units shall be in accordance with the reliability/redundancy checklist
2*The design criteria shall be in accordance with 401 KAR 5:005 including Ten States Standards

Note: This is a suggested format only. The process listed here will not fit every project and will therefore need to be revised accordingly.

* Indicates (Design Biological Flow / Peak Wet Weather Flow)

Design Flow and Concentration Form

Design Flows and Organic Concentrations	Flows MGD	BOD_5 mg/l	BOD_5 lb/day	SS mg/l	SS lb/day	NH_3-N mg/l	NH_3-N lb/day	TKN mg/l	TKN lb/day	P mg/l	P lb/day
Average Daily											
Domestic Portion	7.2	107	6,385	139	8,328	27	1,651	44	2,625	3.5	210
Industrial Portion	1.8	150	2,250	200	3,000	15	225	25	375	1	15
Total	9.0	115	8,635	150	11,328	25	1,876	40	3,000	3	225
Population Equivalent	72,000										
Peak Hourly											
Domestic Portion	10	107	8,870	139	11,567	27	2,293	44	3,645	3.5	292
Industrial Portion	3	150	3,750	200	5,000	15	375	25	625	1	25
Total	13	115	12,620	150	16,567	25	2,668	40	4,370	3	317
Peak Daily	28										
Peak Instantaneous	28										

COST ESTIMATES

1983
May 2014

COST ESTIMATE NO. 1
ALTERNATIVE NO. 1 - OXIDATION DITCHES AND DISCHARGE TO LITTLE RIVER
HAMMOND WOOD WWTP EXPANSION
HOPKINSVILLE WATER ENVIRONMENT AUTHORITY
HOPKINSVILLE, KENTUCKY
JRWCO JOB NO. 1983

Item	Description	Cost
1.	Site Development, Excavation, and Grading	$1,300,000
2.	Site Piping, including River Crossing	$1,800,000
3.	New Main Sewage Pumping Station	$2,800,000
4.	Headworks	$3,500,000
5.	Anaerobic Phosphorous Release Tank	$850,000
6.	Renovation of Oxidation Ditch Nos. 1 and 2	$1,730,000
7.	New Oxidation Ditch No. 3	$4,000,000
8.	New Final Clarifier No. 3	$1,100,000
9.	Blower Building	$600,000
10.	Modifications to Return and Waste Activated Sludge Pumping Station	$300,000
11.	Ultraviolet Disinfection and Effluent Reuse	$1,400,000
12.	Post Aeration Steps and New Outfall	$120,000
13.	Operations Building	$850,000
14.	Electrical Building and Standby Power	$950,000
15.	Controls and Instrumentation	$750,000
16.	Demolition of Existing Structures	$250,000
	ESTIMATED CONSTRUCTION COST	$22,300,000
	CONSTRUCTION CONTINGENCIES	$1,100,000
	ESTIMATED PROJECT CONSTRUCTION COST	$23,400,000
	ESTIMATED BIOSOLIDS CONSTRUCTION COST	$10,100,000
	BUDGETED FOR CONSTRUCTION	$33,500,000
	Engineering: Preliminary	$56,000
	Design (EPA Allowance for Design)	$1,419,000
	Award	$20,000
	During Construction (30 months concurrent) (Owner Furnished Inspection)	$225,000
	Legal, Administrative and Easements:	$30,000
	TOTAL PROJECT COST	$35,250,000

ENR CONSTRUCTION COST INDEX – 9796 (May 2014)

1983
May 2014

COST ESTIMATE NO. 1A – PHASE I
ALTERNATIVE NO. 1 - OXIDATION DITCHES AND DISCHARGE TO LITTLE RIVER
HAMMOND WOOD WWTP EXPANSION
HOPKINSVILLE WATER ENVIRONMENT AUTHORITY
HOPKINSVILLE, KENTUCKY
JRWCO JOB NO. 1983

Item	Description	Cost
1.	Site Development, Excavation, and Grading	$300,000
2.	Site Piping, including River Crossing	$1,000,000
3.	New Main Sewage Pumping Station	$2,800,000
4.	Headworks	$3,500,000
5.	Electrical Building and Standby Power	$950,000
6.	Controls and Instrumentation	$250,000
7.	Demolition of Existing Structures	$50,000
	ESTIMATED CONSTRUCTION COST	$8,850,000
	CONSTRUCTION CONTINGENCIES	$450,000
	ESTIMATED PROJECT CONSTRUCTION COST	$9,300,000
	ESTIMATED BIOSOLIDS CONSTRUCTION COST	$2,500,000
	BUDGETED FOR CONSTRUCTION	$11,800,000
	Engineering: Preliminary	$56,000
	Design (EPA Allowance for Design)	$584,000
	Award	$20,000
	During Construction (18 months concurrent) (Owner Furnished Inspection)	$135,000
	Legal, Administrative and Easements:	$15,000
	TOTAL PROJECT COST	$12,610,000

ENR CONSTRUCTION COST INDEX – 9796 (May 2014)

1983
May 2014

COST ESTIMATE NO. 1B – PHASE II
ALTERNATIVE NO. 1 - OXIDATION DITCHES AND DISCHARGE TO LITTLE RIVER
HAMMOND WOOD WWTP EXPANSION
HOPKINSVILLE WATER ENVIRONMENT AUTHORITY
HOPKINSVILLE, KENTUCKY
JRWCO JOB NO. 1983

Item	Description	Cost
1.	Site Development, Excavation, and Grading	$1,000,000
2.	Site Piping	$800,000
3.	Anaerobic Phosphorous Release Tank	$850,000
4.	Renovation of Oxidation Ditch Nos. 1 and 2	$1,730,000
5.	New Oxidation Ditch No. 3	$4,000,000
6.	New Final Clarifier No. 3	$1,100,000
7.	Blower Building	$600,000
8.	Modifications to Return and Waste Activated Sludge Pumping Station	$300,000
9.	Ultraviolet Disinfection and Effluent Reuse	$1,400,000
10.	Post Aeration Steps and New Outfall	$120,000
11.	Operations Building	$850,000
12.	Controls and Instrumentation	$500,000
13.	Demolition of Existing Structures	$200,000
	ESTIMATED CONSTRUCTION COST	$13,450,000
	CONSTRUCTION CONTINGENCIES	$650,000
	ESTIMATED PROJECT CONSTRUCTION COST	$14,100,000
	ESTIMATED BIOSOLIDS CONSTRUCTION COST	$7,600,000
	BUDGETED FOR CONSTRUCTION	$21,700,000
	Engineering: Design (EPA Allowance for Design)	$985,000
	Award	20,000
	During Construction (24 months concurrent) (Owner Furnished Inspection)	$180,000
	Legal and Administrative:	$15,000
	TOTAL PROJECT COST	$22,900,000

ENR CONSTRUCTION COST INDEX – 9796 (May 2014)

1983
May 2014

COST ESTIMATE NO. 2
ALTERNATIVE NO. 2 – OXIDATION DITCHES AND DISCHARGE TO LAKE BARKLEY
HAMMOND WOOD WWTP EXPANSION
HOPKINSVILLE WATER ENVIRONMENT AUTHORITY
HOPKINSVILLE, KENTUCKY
JRWCO JOB NO. 1983

Item	Description	Cost
1.	Site Development, Excavation, and Grading	$1,300,000
2.	Site Piping, including River Crossing	$1,800,000
3.	New Main Sewage Pumping Station	$2,800,000
4.	Headworks	$3,500,000
5.	Renovation of Oxidation Ditch Nos. 1 and 2	$1,730,000
6.	New Oxidation Ditch No. 3	$4,000,000
7.	New Final Clarifier No. 3	$1,100,000
8.	Blower Building	$600,000
9.	Modifications to Return and Waste Activated Sludge Pumping Station	$300,000
10.	Ultraviolet Disinfection and Effluent Reuse	$1,400,000
11.	10 MG Effluent Storage Tank	$2,100,000
12.	Effluent Pumping Station	$2,000,000
13.	145,000 L.F. of 36-inch Ø Effluent Force Main @ $200 / L.F.	$29,000,000
14.	Operations Building	$850,000
15.	Electrical Building and Standby Power	$950,000
16.	Controls and Instrumentation	$750,000
17.	Demolition of Existing Structures	$250,000
	ESTIMATED CONSTRUCTION COST	$54,430,000
	CONSTRUCTION CONTINGENCIES	$2,570,000
	ESTIMATED PROJECT CONSTRUCTION COST	$57,000,000
	ESTIMATED BIOSOLIDS CONSTRUCTION COST	$10,100,000
	BUDGETED FOR CONSTRUCTION	$67,100,000
	Engineering: Preliminary	$56,000
	Design (EPA Allowance for Design)	$2,592,000
	Award	$30,000
	During Construction (30 months concurrent) (Owner Furnished Inspection)	$225,000
	Legal, Administrative and Easements:	$397,000
	TOTAL PROJECT COST	$70,400,000

ENR CONSTRUCTION COST INDEX – 9796 (May 2014)

1983
May 2014

COST ESTIMATE NO. 3
ALTERNATIVE NO. 3 – SEQUENCING BATCH REACTOR AND DISCHARGE TO LITTLE RIVER
HAMMOND WOOD WWTP EXPANSION
HOPKINSVILLE WATER ENVIRONMENT AUTHORITY
HOPKINSVILLE, KENTUCKY
JRWCO JOB NO. 1983

Item	Description	Cost
1.	Site Development, Excavation, and Grading	$1,300,000
2.	Site Piping, including River Crossing	$2,300,000
3.	New Main Sewage Pumping Station	$2,800,000
4.	Headworks	$3,500,000
5.	Anaerobic Phosphorous Release Tank	$850,000
6.	Sequencing Batch Reactor Tanks & Equipment	$7,450,000
7.	Blower Building	$600,000
8.	Effluent Flow Equalization Facilities	$1,800,000
9.	Waste Sludge Pumping Station	$600,000
10.	Ultraviolet Disinfection and Effluent Reuse	$1,400,000
11.	Post Aeration Steps and New Outfall	$120,000
12.	Operations Building	$850,000
13.	Electrical Building and Standby Power	$950,000
14.	Controls and Instrumentation	$750,000
15.	Demolition of Existing Structures	$500,000
	ESTIMATED CONSTRUCTION COST	$25,770,000
	CONSTRUCTION CONTINGENCIES	$1,330,000
	ESTIMATED PROJECT CONSTRUCTION COST	$27,100,000
	ESTIMATED BIOSOLIDS CONSTRUCTION COST	$10,100,000
	BUDGETED FOR CONSTRUCTION	$37,200,000
	Engineering: Preliminary	$56,000
	Design (EPA Allowance for Design)	$1,566,000
	Award	$20,000
	During Construction (30 months concurrent) (Owner Furnished Inspection)	$225,000
	Legal, Administrative and Land Purchase:	$233,000
	TOTAL PROJECT COST	$39,300,000

ENR CONSTRUCTION COST INDEX – 9796 (May 2014)

BIOSOLIDS TREATMENT & DISPOSAL ALTERNATIVES
HAMMOND WOOD WWTP
HOPKINSVILLE WATER ENVIRONMENT AUTHORITY
HOPKINSVILLE, KENTUCKY
JRWCO JOB NO. 1983
MAY 2014

Alternate No.	Description	Estimated Construction Cost	20 Year Present Worth Estimated Operating Costs	Total Estimated Project Cost	Energy Cost Escalation Risk	Estimated Disposal Quantity
1	Gas Drying to Produce Class "A" Exceptional Quality Biosolids	$7,600,000	$4,150,000 (Min.) $7,250,000 (Max.)	$11,750,000 (Min.) $14,850,000 (Max.)	High	5 C.Y./day @ 75% solids
2	ATAD to Produce Class "A" Exceptional Quality Biosolids	$9,100,000	$3,400,000	$12,500,000	Medium	9 C.Y./day @ 30% solids
3	Solar Drying to Produce Class "A" Exceptional Quality Biosolids	$10,100,000	$1,950,000	$12,050,000	Low	5 C.Y./day @ 75% solids
4	Class "B" Land Farming	$7,100,000	$4,950,000	$12,050,000	Medium	21 C.Y./day @ 15% solids

COST ESTIMATE NO. B-1
BIOSOLIDS ALTERNATIVE NO. 1
GAS DRYING TO PRODUCE CLASS "A" EXCEPTIONAL QUALITY BIOSOLIDS
HAMMOND WOOD WWTP
HOPKINSVILLE WATER ENVIRONMENT AUTHORITY
HOPKINSVILLE, KENTUCKY
JRWCO JOB NO. 1983

Item	Description	Cost	
1.	Two 750,000 Gallon Prestressed Concrete Sludge Holding Tanks	$900,000	
2.	Site Piping, Development, and Roadways	$120,000	
3.	Sludge Pumps, Polymer Feed System, and Sludge Thickener	$1,200,000	
4.	Sludge Blowers and Coarse Bubble Aeration System	$450,000	
5.	Two Screw Conveyors and Two Belt Conveyors	$100,000	
6.	Natural Gas Sludge Dryer	$2,500,000	
7.	Concrete Slab, Metal Building, Electrical and Mechanical	$960,000	
	ESTIMATED CONSTRUCTION COST	$6,380,000	
	CONSTRUCTION CONTINGENCIES (20%)	$1,220,000	
	BUDGETED FOR CONSTRUCTION	$7,600,000	
	20 YEAR OPERATION AND MAINTENANCE PRESENT WORTH	$4,150,000	(Min.)
		$7,250,000	(Max.)
	TOTAL PROJECT COST	$11,750,000	(Min.)
		$14,850,000	(Max.)

ENR CONSTRUCTION COST INDEX – 9796 (May 2014)

J.R. WAUFORD & CO.
Consulting Engineers, Inc.

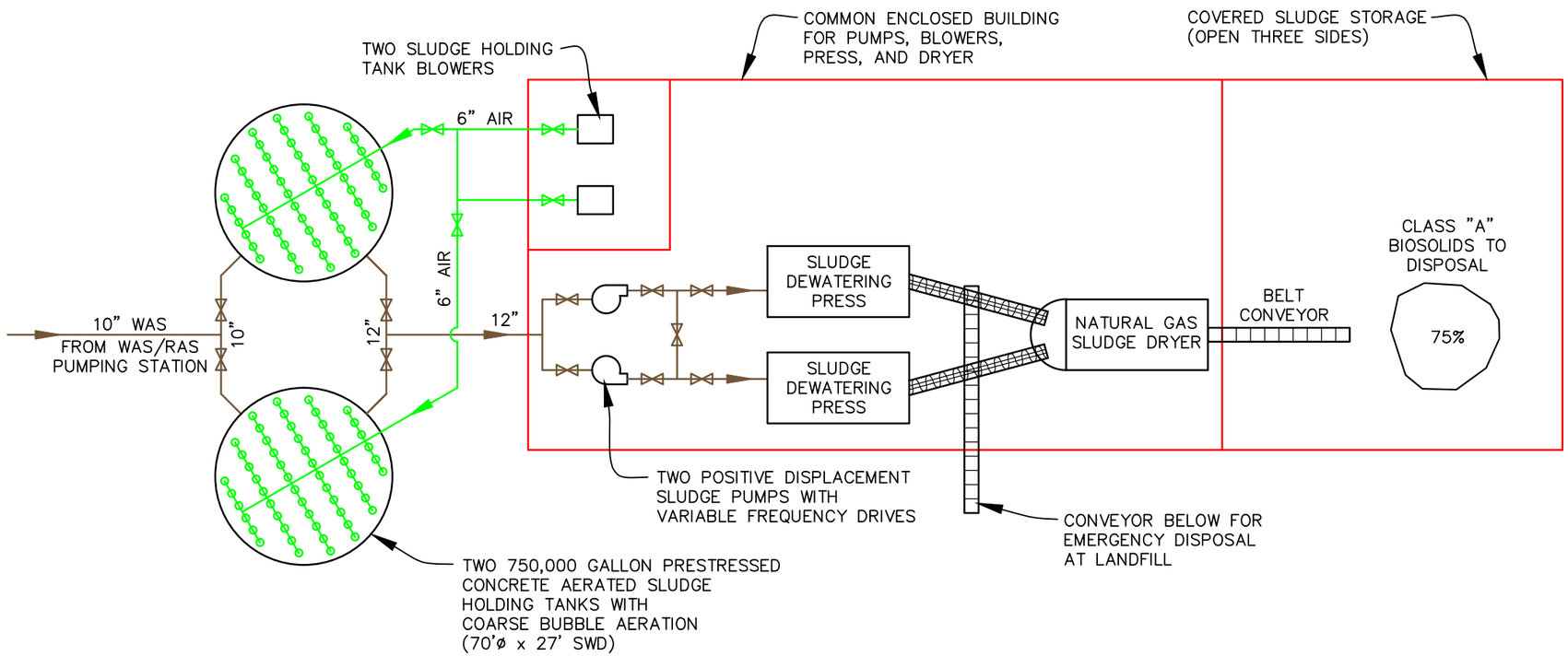

SCHEMATIC
NOT TO SCALE

ALTERNATE NO. 1

GAS DRYING TO PRODUCE CLASS "A" EXCEPTIONAL QUALITY BIOSOLIDS

HAMMOND WOOD WWTP

JRWCO JOB NO. 1983
NOVEMBER 2014

Alternative No. 1 - Gas Drying to Produce Class "A" Exceptional Quality Biosolids
Hammond Wood WWTP; JRWCO Job No. 1983
Hopkinsville Water Environment Authority

Year	Annual Electrical Cost Sludge Blowers ($0.08/KWH)*	Annual Electrical Cost Sludge Pumps ($0.08/KWH)	Annual Electrical Cost Sludge Presses ($0.08/KWH)	Annual Electrical Cost Misc. Building Loads ($0.08/KWH)	Annual Electrical Cost Gas Dryer ($0.08/KWH)	Annual Natural Gast Cost Gas Dryer ($0.60/Therm)	Total Annual Electrical and Natural Gas Costs	P/F 3.00%	Present Worth
2017	$65,000.00	$3,200.00	$6,800.00	$3,000.00	$15,500.00	$94,000.00	$187,500.00	1.000	$187,500.00
2018	$67,600.00	$3,328.00	$7,072.00	$3,120.00	$16,120.00	$97,760.00	$195,000.00	0.9709	$189,325.50
2019	$70,304.00	$3,461.12	$7,354.88	$3,244.80	$16,764.80	$101,670.40	$202,800.00	0.9426	$191,159.28
2020	$73,116.16	$3,599.56	$7,649.08	$3,374.59	$17,435.39	$105,737.22	$210,912.00	0.9151	$193,005.57
2021	$76,040.81	$3,743.55	$7,955.04	$3,509.58	$18,132.81	$109,966.70	$219,348.48	0.8885	$194,891.12
2022	$79,082.44	$3,893.29	$8,273.24	$3,649.96	$18,858.12	$114,365.37	$228,122.42	0.8626	$196,778.40
2023	$82,245.74	$4,049.02	$8,604.17	$3,795.96	$19,612.44	$118,939.99	$237,247.32	0.8375	$198,694.63
2024	$85,535.57	$4,210.98	$8,948.34	$3,947.80	$20,396.94	$123,697.59	$246,737.21	0.8131	$200,622.02
2025	$88,956.99	$4,379.42	$9,306.27	$4,105.71	$21,212.82	$128,645.49	$256,606.70	0.7894	$202,565.33
2026	$92,515.27	$4,554.60	$9,678.52	$4,269.94	$22,061.33	$133,791.31	$266,870.96	0.7664	$204,529.91
2027	$96,215.88	$4,736.78	$10,065.66	$4,440.73	$22,943.79	$139,142.96	$277,545.80	0.7441	$206,521.83
2028	$100,064.51	$4,926.25	$10,468.29	$4,618.36	$23,861.54	$144,708.68	$288,647.64	0.7224	$208,519.05
2029	$104,067.09	$5,123.30	$10,887.02	$4,803.10	$24,816.00	$150,497.03	$300,193.54	0.7014	$210,555.75
2030	$108,229.78	$5,328.24	$11,322.50	$4,995.22	$25,808.64	$156,516.91	$312,201.28	0.6810	$212,609.07
2031	$112,558.97	$5,541.36	$11,775.40	$5,195.03	$26,840.98	$162,777.59	$324,689.33	0.6611	$214,652.12
2032	$117,061.33	$5,763.02	$12,246.42	$5,402.83	$27,914.62	$169,288.69	$337,676.91	0.6419	$216,754.81
2033	$121,743.78	$5,993.54	$12,736.27	$5,618.94	$29,031.21	$176,060.24	$351,183.98	0.6232	$218,857.86
2034	$126,613.53	$6,233.28	$13,245.72	$5,843.70	$30,192.46	$183,102.65	$365,231.34	0.6050	$220,964.96
2035	$131,678.07	$6,482.61	$13,775.55	$6,077.45	$31,400.16	$190,426.75	$379,840.60	0.5874	$223,118.37
2036	$136,945.20	$6,741.92	$14,326.57	$6,320.55	$32,656.16	$198,043.82	$395,034.22	0.5703	$225,288.02
							Present Worth		**$ 4,116,913.60**

* one aerated sludge tank half full- 24 hr per day aeration
All electrical and power costs inflated 4% per year

Alternative No. 1 - Gas Drying to Produce Class "A" Exceptional Quality Biosolids
Hammond Wood WWTP; JRWCO Job No. 1983
Hopkinsville Water Environment Authority

Year	Annual Electrical Cost Sludge Blowers ($0.08/KWH)*	Annual Electrical Cost Sludge Pumps ($0.08/KWH)	Annual Electrical Cost Sludge Presses ($0.08/KWH)	Annual Electrical Cost Misc. Building Loads ($0.08/KWH)	Annual Electrical Cost Gas Dryer ($0.08/KWH)	Annual Natural Gast Cost Gas Dryer ($1.50/Therm)	Total Annual Electrical and Natural Gas Costs	P/F 3.00%	Present Worth
2017	$65,000.00	$3,200.00	$6,800.00	$3,000.00	$15,500.00	$235,000.00	$328,500.00	1.000	$328,500.00
2018	$67,600.00	$3,328.00	$7,072.00	$3,120.00	$16,120.00	$244,400.00	$341,640.00	0.9709	$331,698.28
2019	$70,304.00	$3,461.12	$7,354.88	$3,244.80	$16,764.80	$254,176.00	$355,305.60	0.9426	$334,911.06
2020	$73,116.16	$3,599.56	$7,649.08	$3,374.59	$17,435.39	$264,343.04	$369,517.82	0.9151	$338,145.76
2021	$76,040.81	$3,743.55	$7,955.04	$3,509.58	$18,132.81	$274,916.76	$384,298.54	0.8885	$341,449.25
2022	$79,082.44	$3,893.29	$8,273.24	$3,649.96	$18,858.12	$285,913.43	$399,670.48	0.8626	$344,755.75
2023	$82,245.74	$4,049.02	$8,604.17	$3,795.96	$19,612.44	$297,349.97	$415,657.30	0.8375	$348,112.99
2024	$85,535.57	$4,210.98	$8,948.34	$3,947.80	$20,396.94	$309,243.97	$432,283.59	0.8131	$351,489.79
2025	$88,956.99	$4,379.42	$9,306.27	$4,105.71	$21,212.82	$321,613.73	$449,574.93	0.7894	$354,894.45
2026	$92,515.27	$4,554.60	$9,678.52	$4,269.94	$22,061.33	$334,478.28	$467,557.93	0.7664	$358,336.40
2027	$96,215.88	$4,736.78	$10,065.66	$4,440.73	$22,943.79	$347,857.41	$486,260.25	0.7441	$361,826.25
2028	$100,064.51	$4,926.25	$10,468.29	$4,618.36	$23,861.54	$361,771.70	$505,710.66	0.7224	$365,325.38
2029	$104,067.09	$5,123.30	$10,887.02	$4,803.10	$24,816.00	$376,242.57	$525,939.08	0.7014	$368,893.67
2030	$108,229.78	$5,328.24	$11,322.50	$4,995.22	$25,808.64	$391,292.27	$546,976.65	0.6810	$372,491.10
2031	$112,558.97	$5,541.36	$11,775.40	$5,195.03	$26,840.98	$406,943.97	$568,855.71	0.6611	$376,070.51
2032	$117,061.33	$5,763.02	$12,246.42	$5,402.83	$27,914.62	$423,221.72	$591,609.94	0.6419	$379,754.42
2033	$121,743.78	$5,993.54	$12,736.27	$5,618.94	$29,031.21	$440,150.59	$615,274.34	0.6232	$383,438.97
2034	$126,613.53	$6,233.28	$13,245.72	$5,843.70	$30,192.46	$457,756.62	$639,885.31	0.6050	$387,130.61
2035	$131,678.07	$6,482.61	$13,775.55	$6,077.45	$31,400.16	$476,066.88	$665,480.73	0.5874	$390,903.38
2036	$136,945.20	$6,741.92	$14,326.57	$6,320.55	$32,656.16	$495,109.56	$692,099.95	0.5703	$394,704.60
							Present Worth		**$ 7,212,832.62**

* one aerated sludge tank half full- 24 hr per day aeration
All electrical and power costs inflated 4% per year

COST ESTIMATE NO. B-2
BIOSOLIDS ALTERNATIVE NO. 2
ATAD TO PRODUCE CLASS "A"
EXCEPTIONAL QUALITY BIOSOLIDS
HAMMOND WOOD WWTP
HOPKINSVILLE WATER ENVIRONMENT AUTHORITY
HOPKINSVILLE, KENTUCKY
JRWCO JOB NO. 1983

Item	Description	Cost
1.	Two 750,000 Gallon Prestressed Concrete Sludge Holding Tanks	$900,000
2.	Site Piping, Development, and Roadways	$100,000
3.	Sludge Pumps, Polymer Feed System, and Sludge Thickener	$400,000
4.	Sludge Blowers and Coarse Bubble Aeration System	$600,000
5.	ATAD Concrete and Piping	$900,000
6.	ATAD Equipment	$2,500,000
7.	Post ATAD Sludge Pumps, Polymer Feed System, and Two Sludge Dewatering Presses	$1,200,000
8.	Two Belt Conveyors	$50,000
9.	Concrete Slab, Metal Building, Electrical and Mechanical	$960,000
	ESTIMATED CONSTRUCTION COST	$7,610,000
	CONSTRUCTION CONTINGENCIES (20%)	$1,490,000
	BUDGETED FOR CONSTRUCTION	$9,100,000
	20 YEAR OPERATION AND MAINTENANCE PRESENT WORTH	$3,400,000
	TOTAL PROJECT COST	$12,500,000

ENR CONSTRUCTION COST INDEX – 9796 (May 2014)

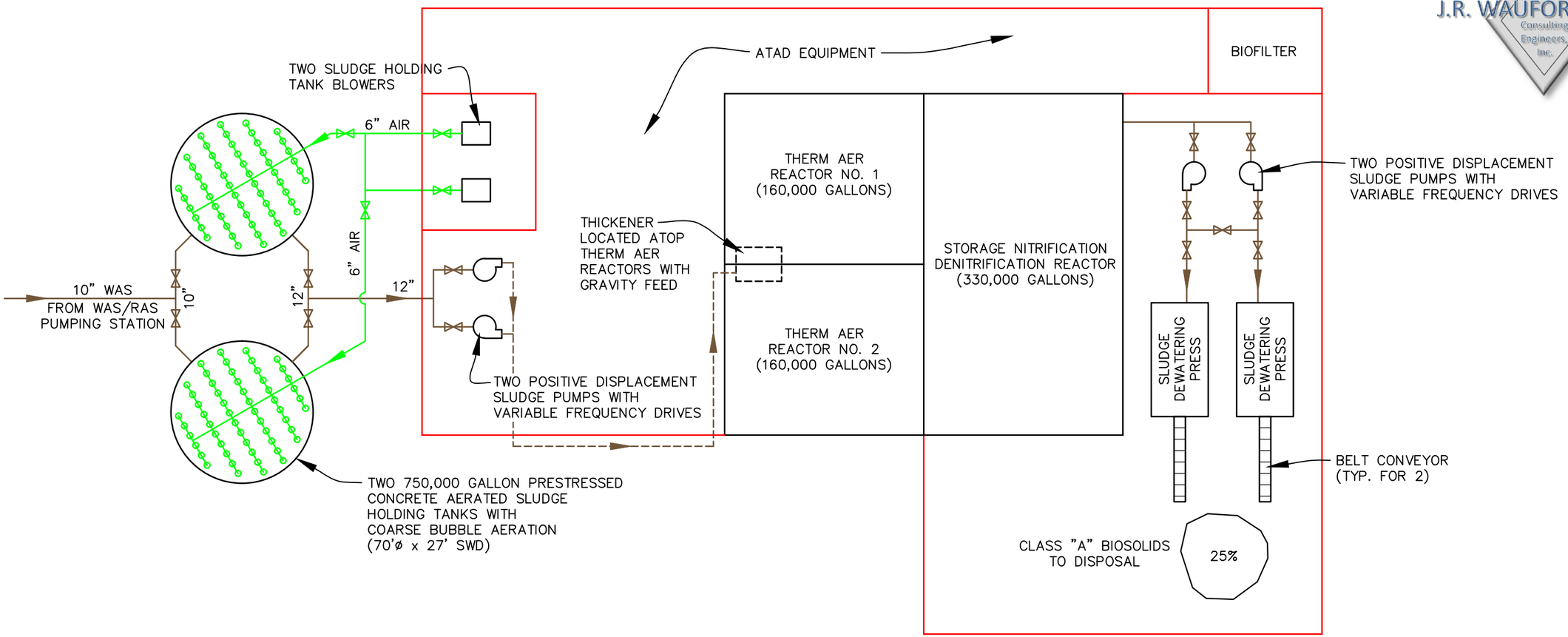

SCHEMATIC

NOT TO SCALE

ALTERNATE NO. 2

AUTOTHERMAL THERMOPHILIC AEROBIC DIGESTION (ATAD) CLASS "A" EXCEPTIONAL QUALITY BIOSOLIDS

HAMMOND WOOD WWTP

JRWCO JOB NO. 1983

NOVEMBER 2014

Alternative No. 2 - ATAD to Produce Class "A" Exceptional Quality Biosolids
Hammond Wood WWTP; JRWCO Job No. 1983
Hopkinsville Water Environment Authority

Year	Annual Electrical Cost Sludge Blowers ($0.08/KWH)*	Annual Electrical Cost Sludge Pumps ($0.08/KWH)	Annual Electrical Cost Sludge Thickener ($0.08/KWH)	Annual Electrical Cost Sludge Presses ($0.08/KWH)	Annual Electrical Cost Misc. Building Loads ($0.08/KWH)	Annual Electrical Cost ATAD ($0.08/KWH)	Total Annual Electrical Costs	P/F 3.00%	Present Worth
2017	$65,000.00	$4,800.00	$3,400.00	$4,600.00	$3,000.00	$73,000.00	$153,800.00	1.000	$153,800.00
2018	$67,600.00	$4,992.00	$3,536.00	$4,784.00	$3,120.00	$75,920.00	$159,952.00	0.9709	$155,297.40
2019	$70,304.00	$5,191.68	$3,677.44	$4,975.36	$3,244.80	$78,956.80	$166,350.08	0.9426	$156,801.59
2020	$73,116.16	$5,399.35	$3,824.54	$5,174.37	$3,374.59	$82,115.07	$173,004.08	0.9151	$158,316.04
2021	$76,040.81	$5,615.32	$3,977.52	$5,381.35	$3,509.58	$85,399.67	$179,924.25	0.8885	$159,862.69
2022	$79,082.44	$5,839.93	$4,136.62	$5,596.60	$3,649.96	$88,815.66	$187,121.22	0.8626	$161,410.76
2023	$82,245.74	$6,073.53	$4,302.08	$5,820.47	$3,795.96	$92,368.29	$194,606.07	0.8375	$162,982.58
2024	$85,535.57	$6,316.47	$4,474.17	$6,053.29	$3,947.80	$96,063.02	$202,390.31	0.8131	$164,563.56
2025	$88,956.99	$6,569.13	$4,653.13	$6,295.42	$4,105.71	$99,905.54	$210,485.92	0.7894	$166,157.59
2026	$92,515.27	$6,831.90	$4,839.26	$6,547.23	$4,269.94	$103,901.76	$218,905.36	0.7664	$167,769.07
2027	$96,215.88	$7,105.17	$5,032.83	$6,809.12	$4,440.73	$108,057.83	$227,661.57	0.7441	$169,402.97
2028	$100,064.51	$7,389.38	$5,234.14	$7,081.49	$4,618.36	$112,380.15	$236,768.03	0.7224	$171,041.23
2029	$104,067.09	$7,684.95	$5,443.51	$7,364.75	$4,803.10	$116,875.35	$246,238.76	0.7014	$172,711.86
2030	$108,229.78	$7,992.35	$5,661.25	$7,659.34	$4,995.22	$121,550.37	$256,088.31	0.6810	$174,396.14
2031	$112,558.97	$8,312.05	$5,887.70	$7,965.71	$5,195.03	$126,412.38	$266,331.84	0.6611	$176,071.98
2032	$117,061.33	$8,644.53	$6,123.21	$8,284.34	$5,402.83	$131,468.88	$276,985.11	0.6419	$177,796.74
2033	$121,743.78	$8,990.31	$6,368.14	$8,615.71	$5,618.94	$136,727.63	$288,064.52	0.6232	$179,521.81
2034	$126,613.53	$9,349.92	$6,622.86	$8,960.34	$5,843.70	$142,196.74	$299,587.10	0.6050	$181,250.19
2035	$131,678.07	$9,723.92	$6,887.78	$9,318.76	$6,077.45	$147,884.61	$311,570.58	0.5874	$183,016.56
2036	$136,945.20	$10,112.88	$7,163.29	$9,691.51	$6,320.55	$153,799.99	$324,033.40	0.5703	$184,796.25
							Present Worth	$	**3,376,966.99**

* one aerated sludge tank half full- 24 hr per day aeration
All electrical and power costs inflated 4% per year

1983
May 2014

COST ESTIMATE NO. B-3
BIOSOLIDS ALTERNATIVE NO. 3
SOLAR DRYING TO PRODUCE CLASS "A" EXCEPTIONAL QUALITY BIOSOLIDS
HAMMOND WOOD WWTP
HOPKINSVILLE WATER ENVIRONMENT AUTHORITY
HOPKINSVILLE, KENTUCKY
JRWCO JOB NO. 1983

Item	Description	Cost
1.	Two 750,000 Gallon Prestressed Concrete Sludge Holding Tanks	$900,000
2.	Site Piping, Development, and Roadways	$140,000
3.	Three Sludge Pumps, Polymer Feed System, and Two Sludge Dewatering Presses	$1,200,000
4.	Sludge Blowers and Coarse Bubble Aeration System	$600,000
5.	Concrete Slab, Metal Building, Electrical and Mechanical	$850,000
6.	Solar Drying Unit Concrete Slab	$350,000
7.	Solar Drying Unit Equipment	$4,400,000
	ESTIMATED CONSTRUCTION COST	$8,440,000
	CONSTRUCTION CONTINGENCIES (20%)	$1,660,000
	BUDGETED FOR CONSTRUCTION	$10,100,000
	20 YEAR OPERATION AND MAINTENANCE PRESENT WORTH	$1,950,000
	TOTAL PROJECT COST	$12,050,000

ENR CONSTRUCTION COST INDEX – 9796 (May 2014)

J.R. WAUFORD & CO.
Consulting Engineers, Inc.

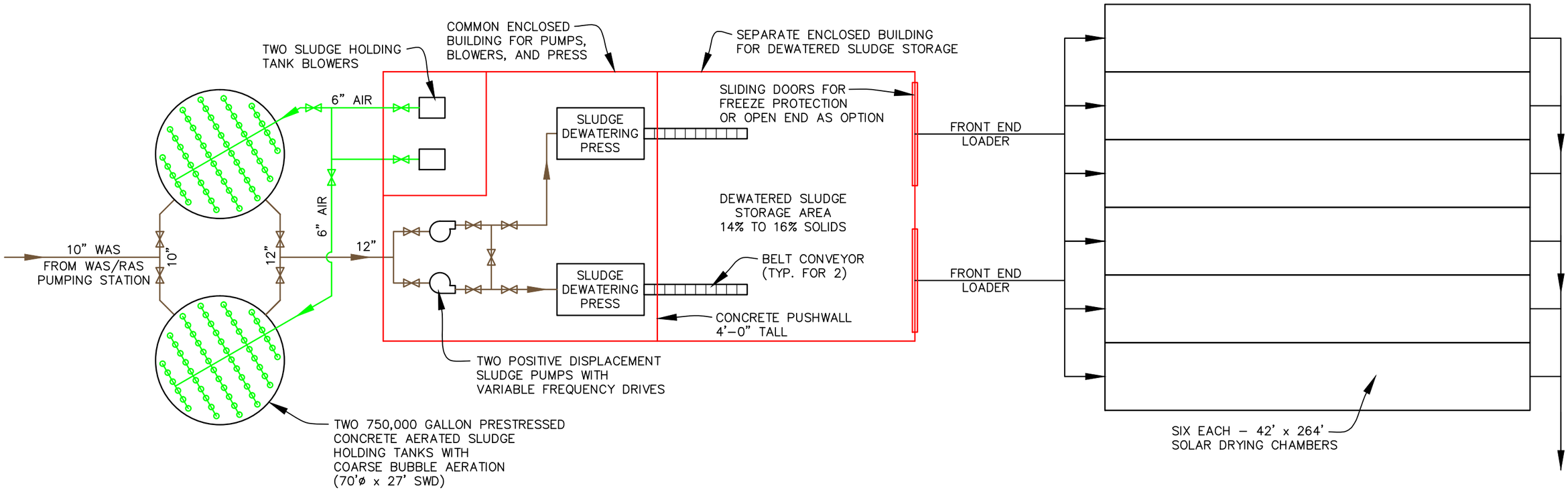

CLASS "A" EXCEPTIONAL QUALITY BIOSOLIDS

75%

SCHEMATIC

NOT TO SCALE

ALTERNATE NO. 3

SOLAR DRYING TO PRODUCE CLASS "A" EXCEPTIONAL QUALITY BIOSOLIDS

HAMMOND WOOD WWTP

JRWCO JOB NO. 1983

NOVEMBER 2014

Alternative No. 3 - Solar Drying to Produce Class "A" Exceptional Quality Biosolids
Hammond Wood WWTP; JRWCO Job No. 1983
Hopkinsville Water Environment Authority

Year	Annual Electrical Cost Sludge Blowers ($0.08/KWH)*	Annual Electrical Cost Sludge Pumps ($0.08/KWH)	Annual Electrical Cost Sludge Presses ($0.08/KWH)	Annual Electrical Cost Misc. Building Loads ($0.08/KWH)	Annual Electrical Cost Solar Dryer ($0.08/KWH)	Total Annual Electrical Costs	P/F 3.00%	Present Worth
2017	$65,000.00	$3,200.00	$6,800.00	$3,000.00	$9,500.00	$87,500.00	1.000	$87,500.00
2018	$67,600.00	$3,328.00	$7,072.00	$3,120.00	$9,880.00	$91,000.00	0.9709	$88,351.90
2019	$70,304.00	$3,461.12	$7,354.88	$3,244.80	$10,275.20	$94,640.00	0.9426	$89,207.66
2020	$73,116.16	$3,599.56	$7,649.08	$3,374.59	$10,686.21	$98,425.60	0.9151	$90,069.27
2021	$76,040.81	$3,743.55	$7,955.04	$3,509.58	$11,113.66	$102,362.62	0.8885	$90,949.19
2022	$79,082.44	$3,893.29	$8,273.24	$3,649.96	$11,558.20	$106,457.13	0.8626	$91,829.92
2023	$82,245.74	$4,049.02	$8,604.17	$3,795.96	$12,020.53	$110,715.41	0.8375	$92,724.16
2024	$85,535.57	$4,210.98	$8,948.34	$3,947.80	$12,501.35	$115,144.03	0.8131	$93,623.61
2025	$88,956.99	$4,379.42	$9,306.27	$4,105.71	$13,001.41	$119,749.79	0.7894	$94,530.49
2026	$92,515.27	$4,554.60	$9,678.52	$4,269.94	$13,521.46	$124,539.78	0.7664	$95,447.29
2027	$96,215.88	$4,736.78	$10,065.66	$4,440.73	$14,062.32	$129,521.37	0.7441	$96,376.86
2028	$100,064.51	$4,926.25	$10,468.29	$4,618.36	$14,624.81	$134,702.23	0.7224	$97,308.89
2029	$104,067.09	$5,123.30	$10,887.02	$4,803.10	$15,209.81	$140,090.32	0.7014	$98,259.35
2030	$108,229.78	$5,328.24	$11,322.50	$4,995.22	$15,818.20	$145,693.93	0.6810	$99,217.57
2031	$112,558.97	$5,541.36	$11,775.40	$5,195.03	$16,450.93	$151,521.69	0.6611	$100,170.99
2032	$117,061.33	$5,763.02	$12,246.42	$5,402.83	$17,108.96	$157,582.56	0.6419	$101,152.24
2033	$121,743.78	$5,993.54	$12,736.27	$5,618.94	$17,793.32	$163,885.86	0.6232	$102,133.67
2034	$126,613.53	$6,233.28	$13,245.72	$5,843.70	$18,505.05	$170,441.29	0.6050	$103,116.98
2035	$131,678.07	$6,482.61	$13,775.55	$6,077.45	$19,245.26	$177,258.95	0.5874	$104,121.90
2036	$136,945.20	$6,741.92	$14,326.57	$6,320.55	$20,015.07	$184,349.30	0.5703	$105,134.41
						Present Worth		**$ 1,921,226.34**

* one aerated sludge tank half full- 24 hr per day aeration
All electrical and power costs inflated 4% per year

COST ESTIMATE NO. B-4
ALTERNATIVE NO. 4
LAND FARMING TO PRODUCE CLASS "B" BIOSOLIDS
HAMMOND WOOD WWTP
HOPKINSVILLE WATER ENVIRONMENT AUTHORITY
HOPKINSVILLE, KENTUCKY
JRWCO JOB NO. 1983

Item	Description	Cost
1.	Two 1,250,000 Gallon Prestressed Concrete Sludge Holding Tanks	$1,200,000
2.	Site Piping, Development, and Roadways	$100,000
3.	Sludge Pumps, Polymer Feed System, and Two Sludge Dewatering Presses	$1,200,000
4.	Sludge Blowers and Coarse Bubble Aeration System	$600,000
5.	Concrete Slab, Metal Building, Electrical, and Mechanical	$860,000
6.	400 Acre Land Farm	$2,000,000
	ESTIMATED CONSTRUCTION COST	$5,960,000
	CONSTRUCTION CONTINGENCIES (20%)	$1,140,000
	BUDGETED FOR CONSTRUCTION	$7,100,000
	20 YEAR OPERATION AND MAINTENANCE PRESENT WORTH	$4,950,000
	TOTAL PROJECT COST	$12,050,000

ENR CONSTRUCTION COST INDEX – 9796 (May 2014)

J.R. WAUFORD & CO.
Consulting Engineers, Inc.

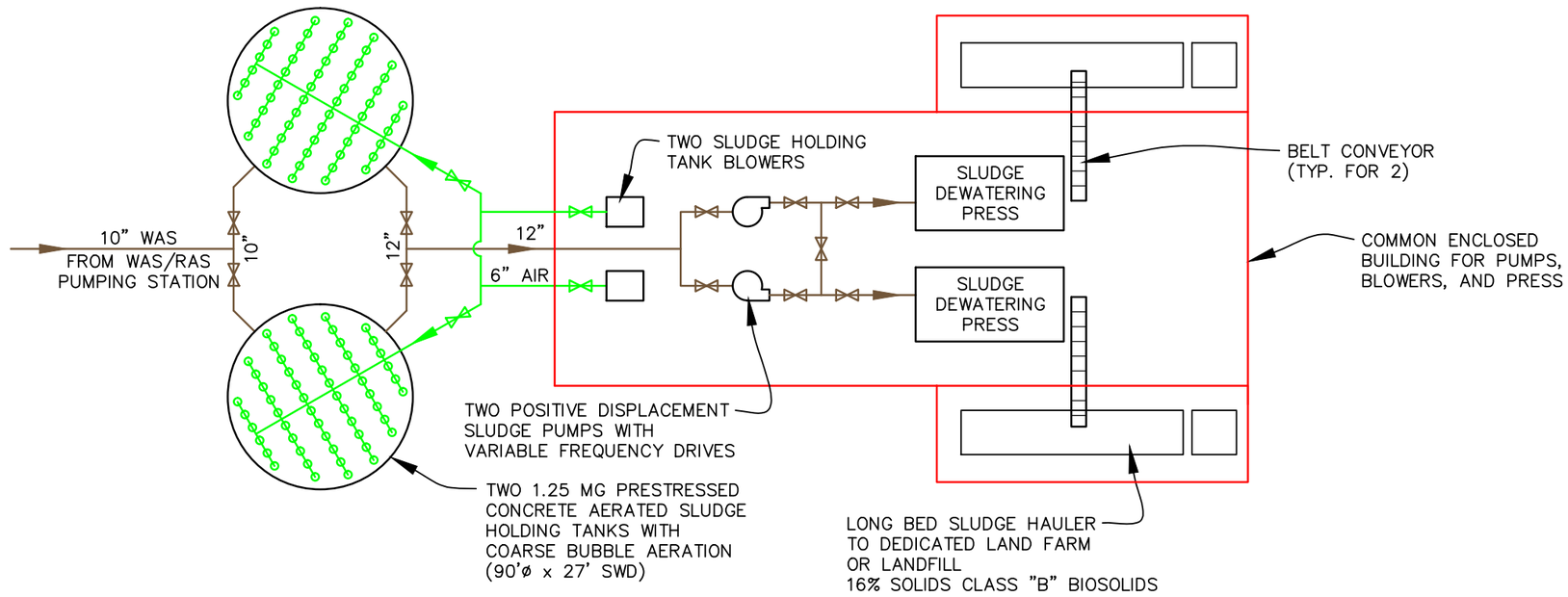

SCHEMATIC
NOT TO SCALE

ALTERNATE NO. 4

LAND FARMING TO PRODUCE
CLASS "B" BIOSOLIDS

HAMMOND WOOD WWTP

JRWCO JOB NO. 1983
NOVEMBER 2014

Alternative No. 4 - Class "B" Land Farming
Hammond Wood WWTP; JRWCO Job No. 1983
Hopkinsville Water Environment Authority

Year	Annual Electrical Cost Sludge Blowers ($0.08/KWH)*	Annual Electrical Cost Sludge Pumps ($0.08/KWH)	Annual Electrical Cost Sludge Presses ($0.08/KWH)	Annual Electrical Cost Misc. Building Loads ($0.08/KWH)	Landfill Tipping Fees 4 months per year $32/ton	Total Annual Electrical and Landfilling Costs	P/F 3.00%	Present Worth
2017	$97,500.00	$3,200.00	$6,800.00	$3,000.00	$113,000.00	$223,500.00	1.000	$223,500.00
2018	$101,400.00	$3,328.00	$7,072.00	$3,120.00	$117,520.00	$232,440.00	0.9709	$225,676.00
2019	$105,456.00	$3,461.12	$7,354.88	$3,244.80	$122,220.80	$241,737.60	0.9426	$227,861.86
2020	$109,674.24	$3,599.56	$7,649.08	$3,374.59	$127,109.63	$251,407.10	0.9151	$230,062.64
2021	$114,061.21	$3,743.55	$7,955.04	$3,509.58	$132,194.02	$261,463.39	0.8885	$232,310.22
2022	$118,623.66	$3,893.29	$8,273.24	$3,649.96	$137,481.78	$271,921.92	0.8626	$234,559.85
2023	$123,368.60	$4,049.02	$8,604.17	$3,795.96	$142,981.05	$282,798.80	0.8375	$236,844.00
2024	$128,303.35	$4,210.98	$8,948.34	$3,947.80	$148,700.29	$294,110.75	0.8131	$239,141.45
2025	$133,435.48	$4,379.42	$9,306.27	$4,105.71	$154,648.30	$305,875.18	0.7894	$241,457.87
2026	$138,772.90	$4,554.60	$9,678.52	$4,269.94	$160,834.23	$318,110.19	0.7664	$243,799.65
2027	$144,323.82	$4,736.78	$10,065.66	$4,440.73	$167,267.60	$330,834.60	0.7441	$246,174.02
2028	$150,096.77	$4,926.25	$10,468.29	$4,618.36	$173,958.31	$344,067.98	0.7224	$248,554.71
2029	$156,100.64	$5,123.30	$10,887.02	$4,803.10	$180,916.64	$357,830.70	0.7014	$250,982.45
2030	$162,344.67	$5,328.24	$11,322.50	$4,995.22	$188,153.31	$372,143.93	0.6810	$253,430.02
2031	$168,838.45	$5,541.36	$11,775.40	$5,195.03	$195,679.44	$387,029.69	0.6611	$255,865.33
2032	$175,591.99	$5,763.02	$12,246.42	$5,402.83	$203,506.62	$402,510.87	0.6419	$258,371.73
2033	$182,615.67	$5,993.54	$12,736.27	$5,618.94	$211,646.88	$418,611.31	0.6232	$260,878.57
2034	$189,920.30	$6,233.28	$13,245.72	$5,843.70	$220,112.76	$435,355.76	0.6050	$263,390.24
2035	$197,517.11	$6,482.61	$13,775.55	$6,077.45	$228,917.27	$452,769.99	0.5874	$265,957.09
2036	$205,417.79	$6,741.92	$14,326.57	$6,320.55	$238,073.96	$470,880.79	0.5703	$268,543.32
						Present Worth		**$ 4,907,361.01**

* one aerated sludge tank half full- 24 hr per day aeration
All electrical and power costs inflated 4% per year