Appendix C
Drawings of BMPs

Page

Brushlayering C-1
Check Dam C-2
Construction Entrance C-3
Culvert Inlet Sediment Barrier C-4
Curb Inlet Sediment Barrier – Block and Gravel C-5
Curb Inlet Sediment Barrier – Sandbags C-6
Diversion Channel C-7
Drop Inlet Sediment Barrier – Block and Gravel C-8
Erosion Blankets and Turf Reinforcement Mats – Channel Installation C-9
Erosion Blankets and Turf Reinforcement Mats – Slope Installation C-10
Gabions C-11
Grass Lined Channel – Typical Cross Sections C-12
Grass Lined Channel – Typical Installation C-13
Live Staking C-14
Outlet Protection Energy Dissipator C-15
Rock Lined Channel C-16
Sediment Basin – Plan View C-17
Sediment Basin – Section View C-18
Sediment Trap – Plan View C-19
Sediment Trap – Embankment and Spillway Elevation C-20
Sediment Trap – Stone Section C-21
Silt Fence Installation – Slicing Method C-22
Silt Fence Installation – Trench Method C-23
Silt Fence Placement for Perimeter Control C-24
Silt Fence Placement – One Slope C-25
Silt Fence Placement – Two Slopes C-26
Slope Drain C-27
Stream Crossing C-28
Surface Roughening C-29
Wattle C-30

NOTE:
ROOTED, LEAFED CONDITION OF THE LIVING PLANT MATERIAL IS NOT REPRESENTATIVE OF THE TIME OF INSTALLATION

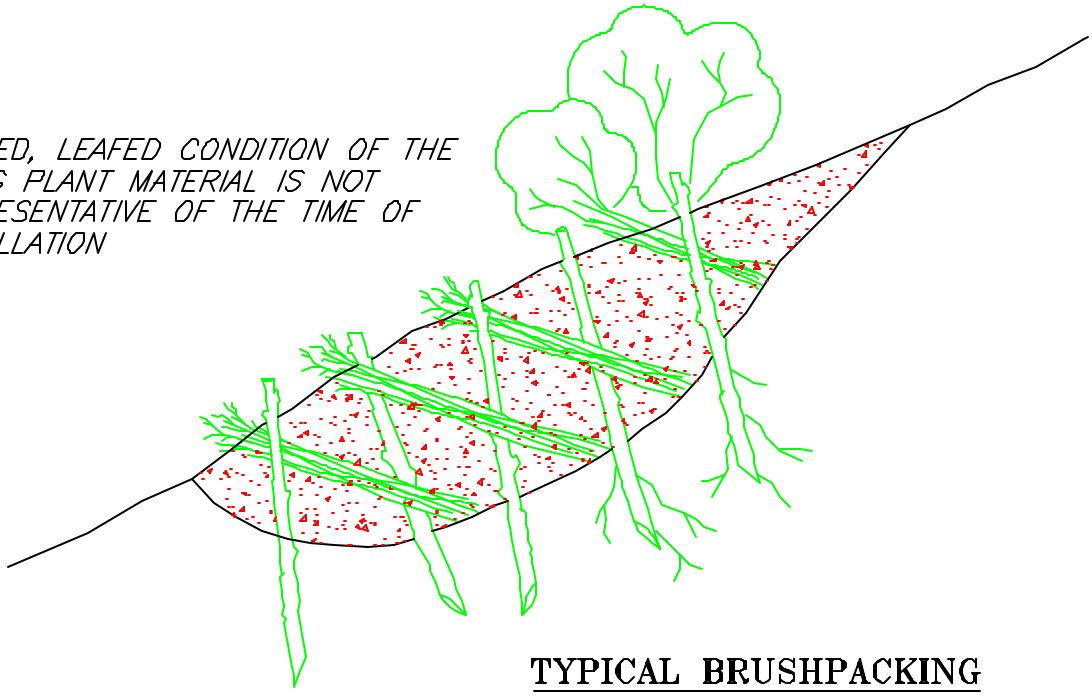

TYPICAL BRUSHPACKING

COVER BRUSHLAYER IMMEDIATELY WITH 6" OF FILL SOIL, WATER AND COMPACT ACCORDING TO SPECIFICATIONS

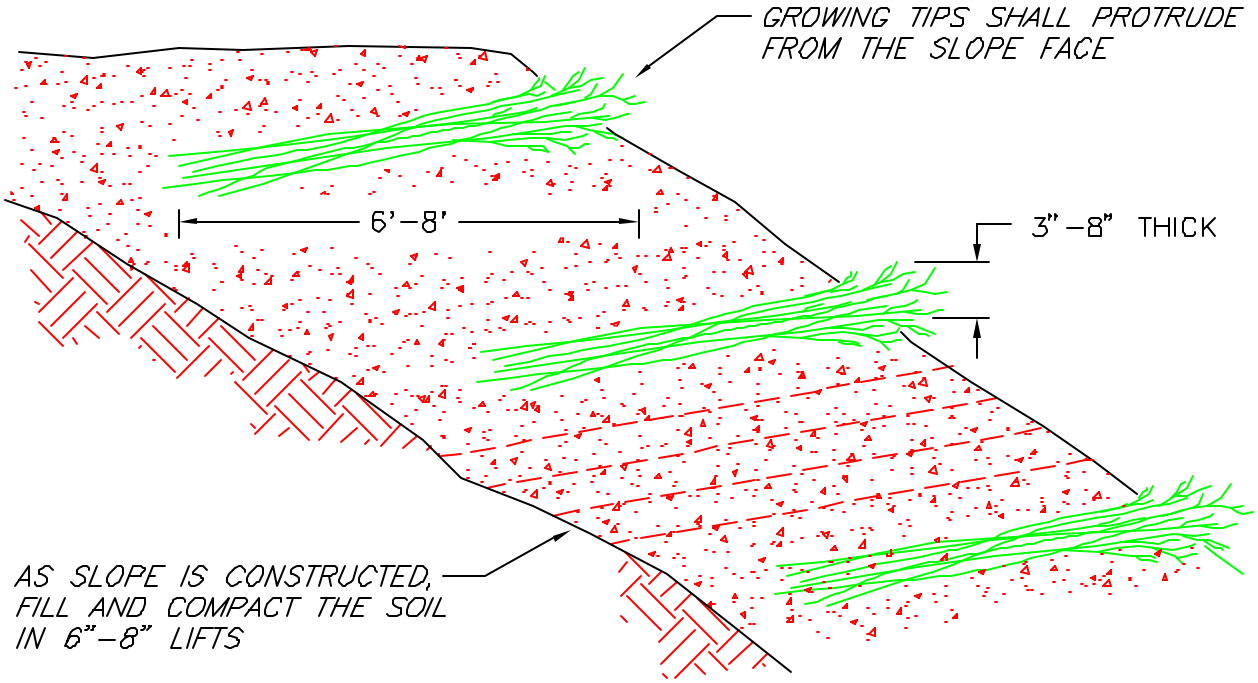

TYPICAL BRUSHLAYERING WITH SLOPE CONSTRUCTION

BRUSHLAYERING

SOURCE: SALIX APPLIED EARTHCARE – EROSION DRAW 5.0

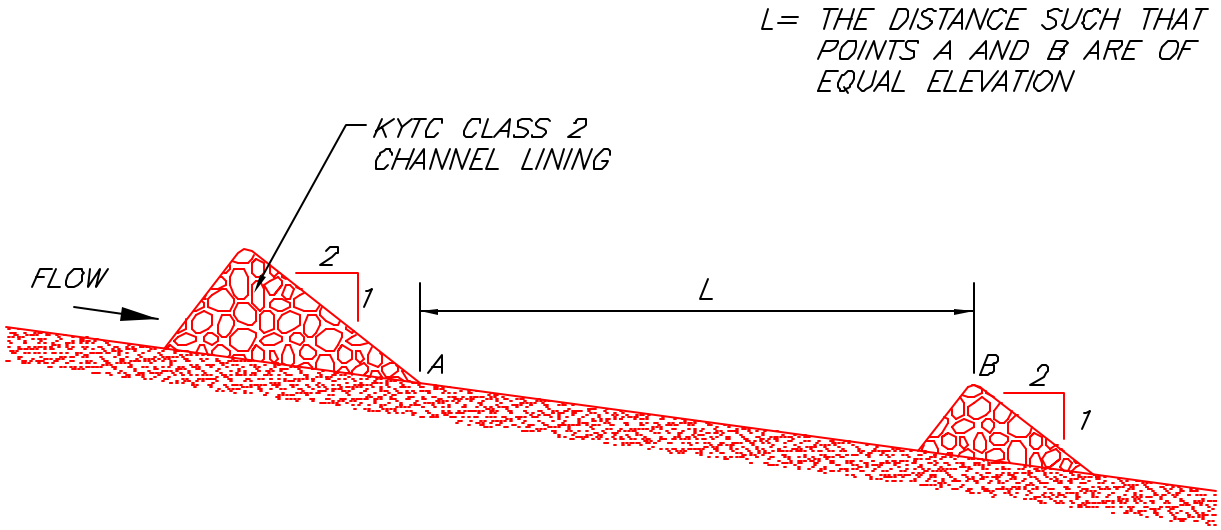

LONGITUDINAL SECTION SHOWING SPACING BETWEEN CHECK DAMS

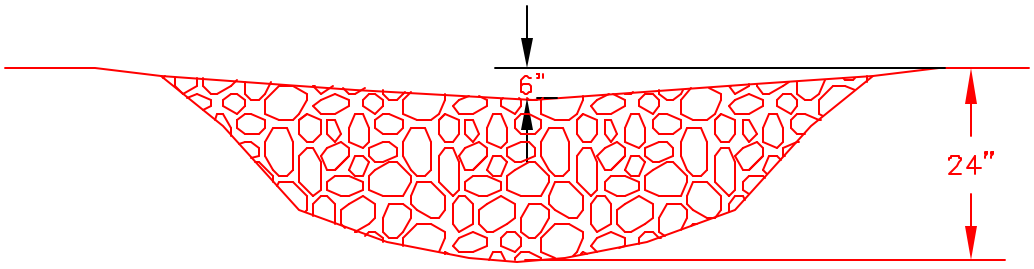

SECTION ACROSS CHANNEL

CHECK DAM

SECTION A – A

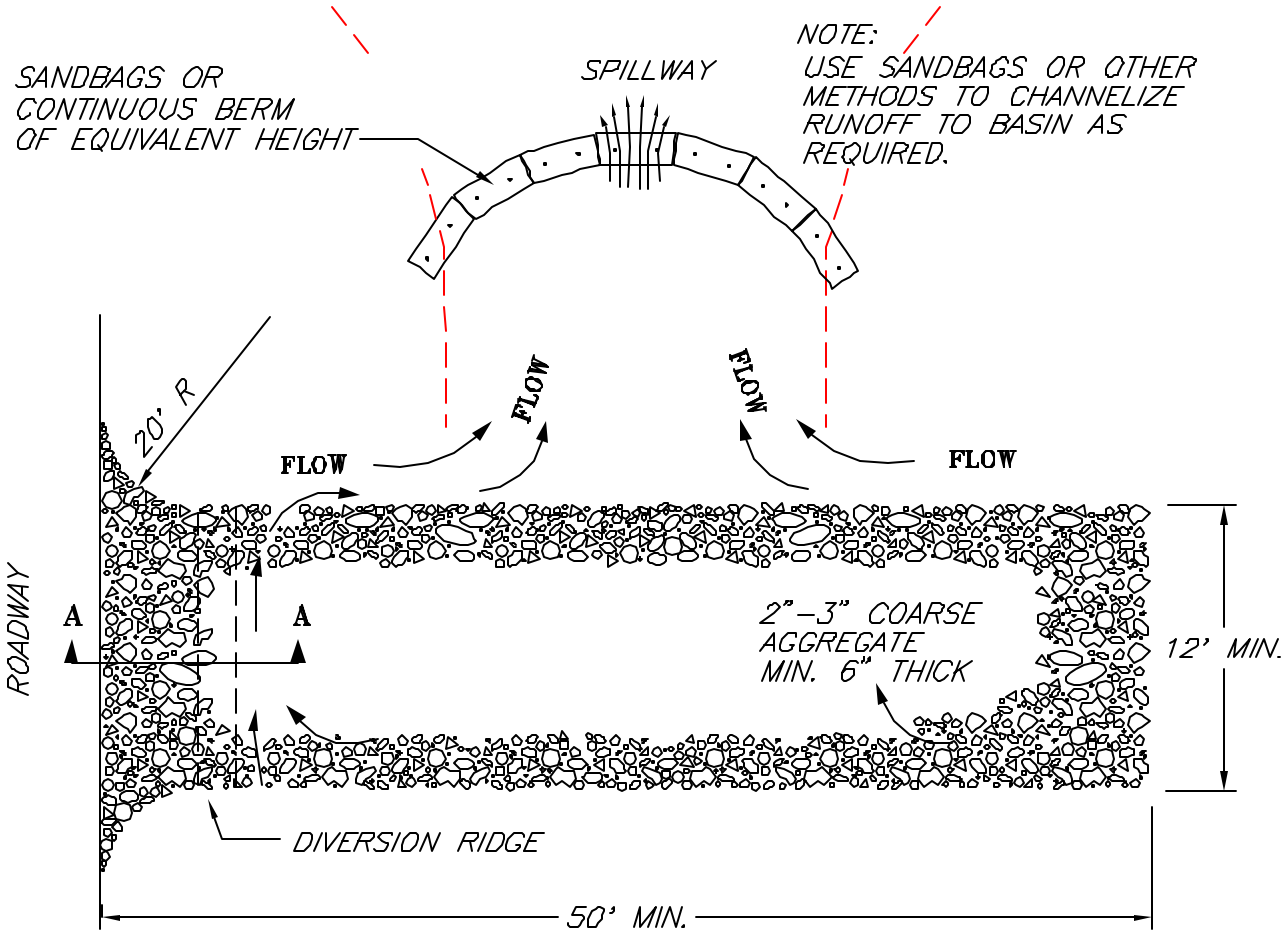

PLAN

NOTES:

1. THE ENTRANCE SHALL BE MAINTAINED IN A CONDITION THAT WILL PREVENT TRACKING OR FLOWING OF SEDIMENT ONTO PUBLIC RIGHT–OF–WAYS. THIS MAY REQUIRE TOP DRESSING, REPAIR AND/OR CLEAN OUT OF ANY MEASURES USED TO TRAP SEDIMENT.

2. WHEN NECESSARY, WHEELS SHALL BE CLEANED PRIOR TO ENTRANCE ONTO PUBLIC RIGHT–OF–WAY.

3. WHEN WASHING IS REQUIRED, IT SHALL BE DONE ON AN AREA STABILIZED WITH CRUSHED STONE THAT DRAINS INTO AN APPROVED SEDIMENT TRAP OR SEDIMENT BASIN.

SOURCE: SALIX APPLIED EARTHCARE – EROSION DRAW 5.0

CONSTRUCTION ENTRANCE

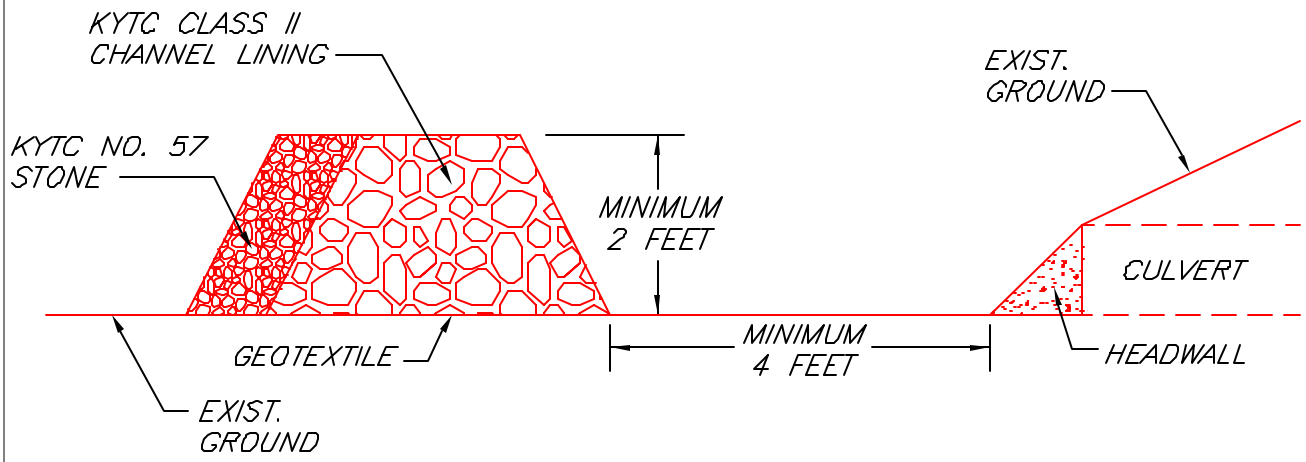

CROSS SECTION

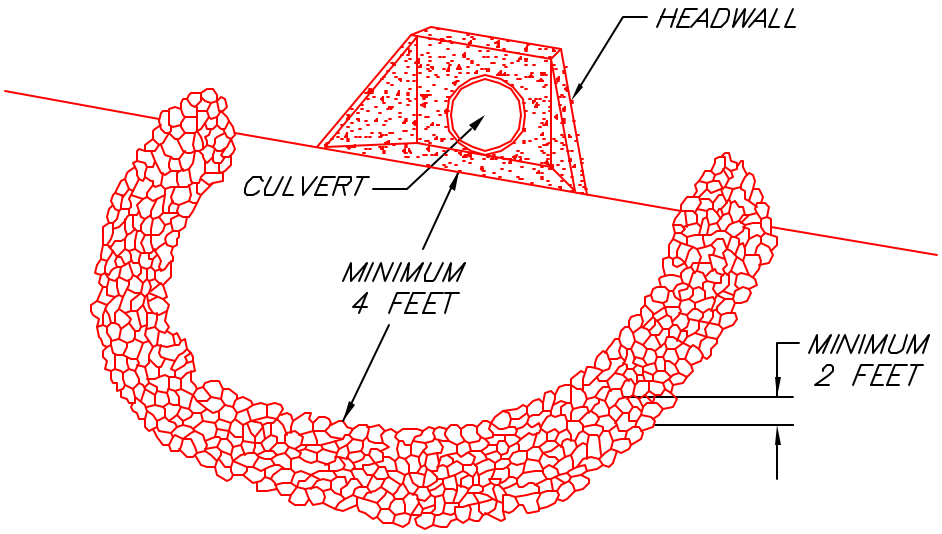

CULVERT INLET SEDIMENT BARRIER

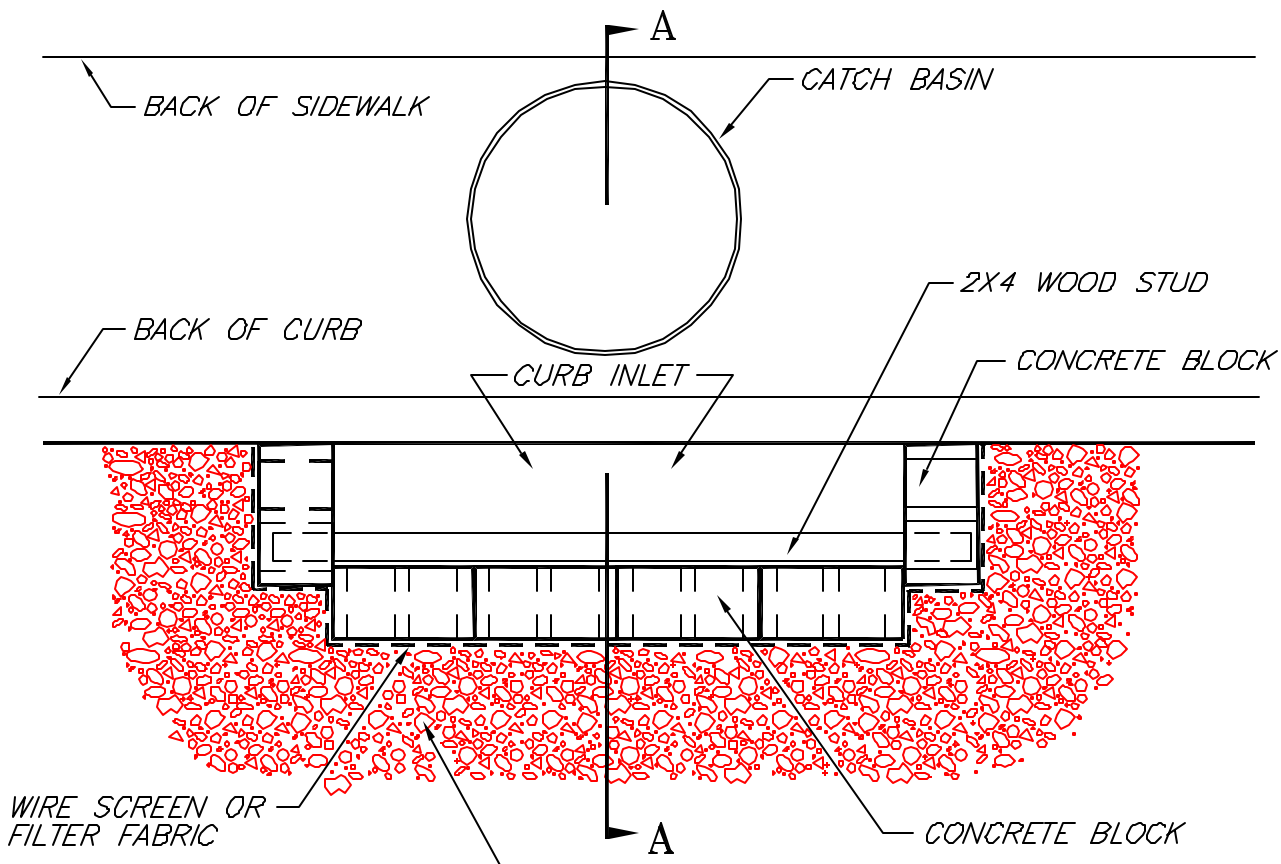

PLAN VIEW

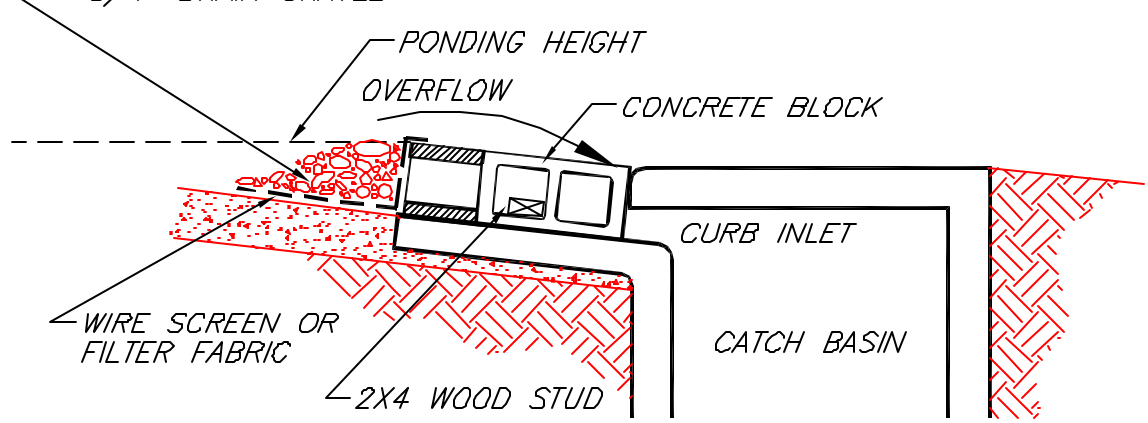

SECTION A – A

NOTES:

1. USE BLOCK AND GRAVEL TYPE SEDIMENT BARRIER WHEN CURB INLET IS LOCATED IN GENTLY SLOPING STREET SEGMENT, WHERE WATER CAN POND AND ALLOW SEDIMENT TO SEPARATE FROM RUNOFF.
2. BARRIER SHALL ALLOW FOR OVERFLOW FROM SEVERE STORM EVENT.
3. INSPECT BARRIERS AND REMOVE SEDIMENT AFTER EACH STORM EVENT. SEDIMENT AND GRAVEL MUST BE REMOVED FROM THE TRAVELED WAY IMMEDIATELY.

SOURCE: SALIX APPLIED EARTHCARE – EROSION DRAW 5.0

CURB INLET SEDIMENT BARRIER (BLOCK & GRAVEL)

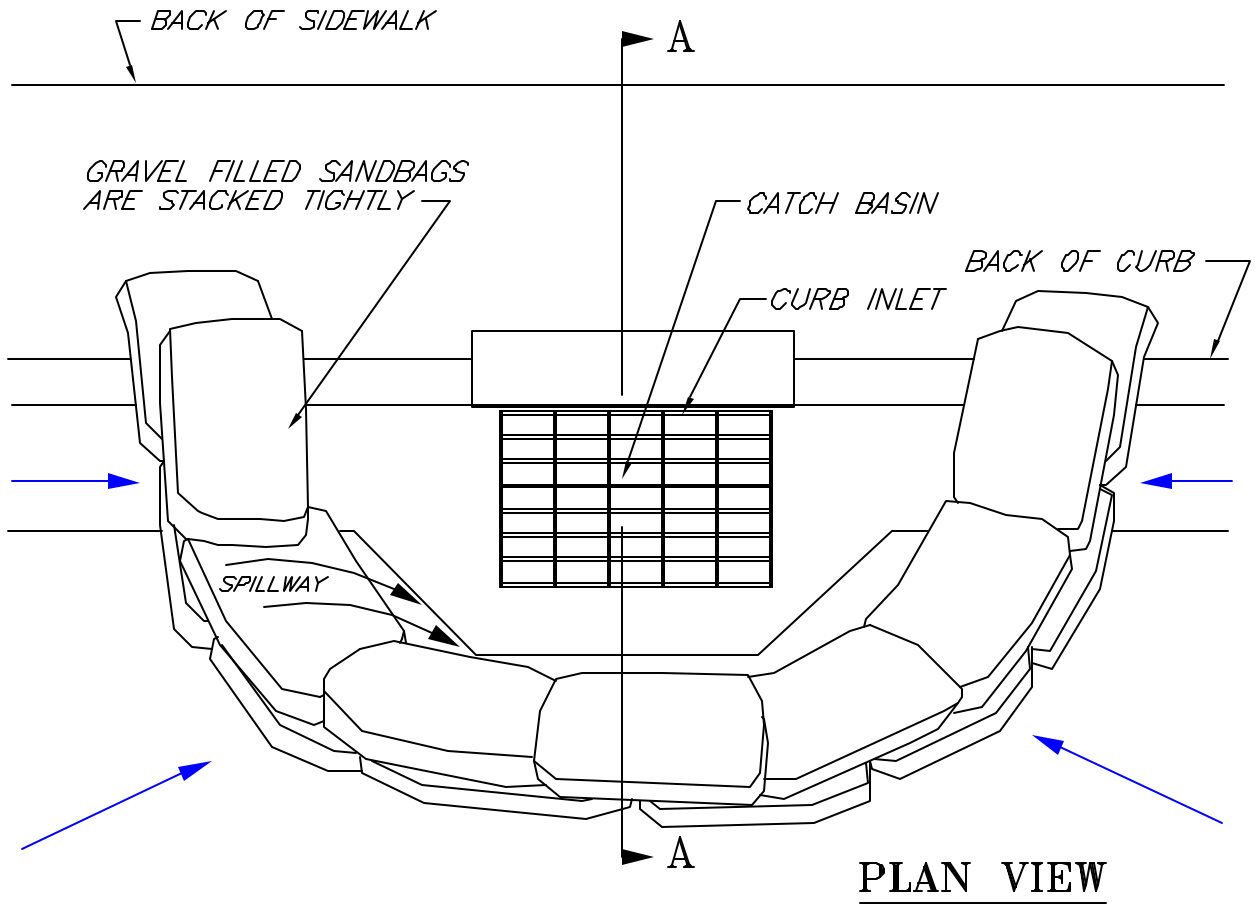

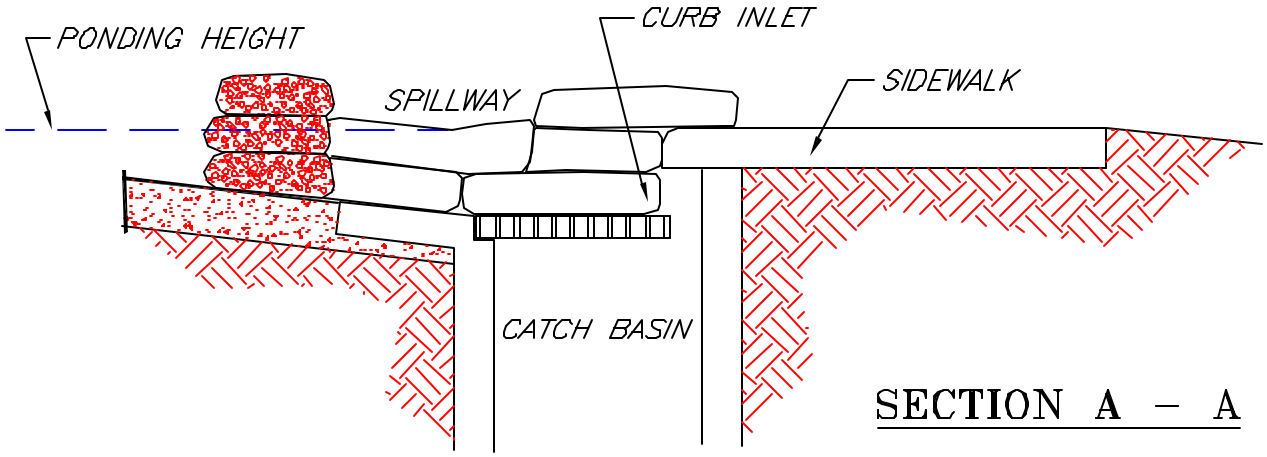

NOTES:

1. PLACE CURB TYPE SEDIMENT BARRIERS ON GENTLY SLOPING STREET SEGMENTS WHERE WATER CAN POND AND ALLOW SEDIMENT TO SEPARATE FROM RUNOFF.
2. SANDBAGS, OF EITHER BURLAP OR WOVEN GEOTEXTILE FABRIC, ARE FILLED WITH GRAVEL, LAYERED AND PACKED TIGHTLY.
3. LEAVE ONE SANDBAG GAP IN THE TOP ROW TO PROVIDE A SPILLWAY FOR OVERFLOW.
4. INSPECT BARRIERS AND REMOVE SEDIMENT AFTER EACH STORM EVENT. SEDIMENT AND GRAVEL MUST BE REMOVED FROM THE TRAVELED WAY IMMEDIATELY.

SOURCE: SALIX APPLIED EARTHCARE – EROSION DRAW 5.0

CURB INLET SEDIMENT BARRIER (SANDBAGS)

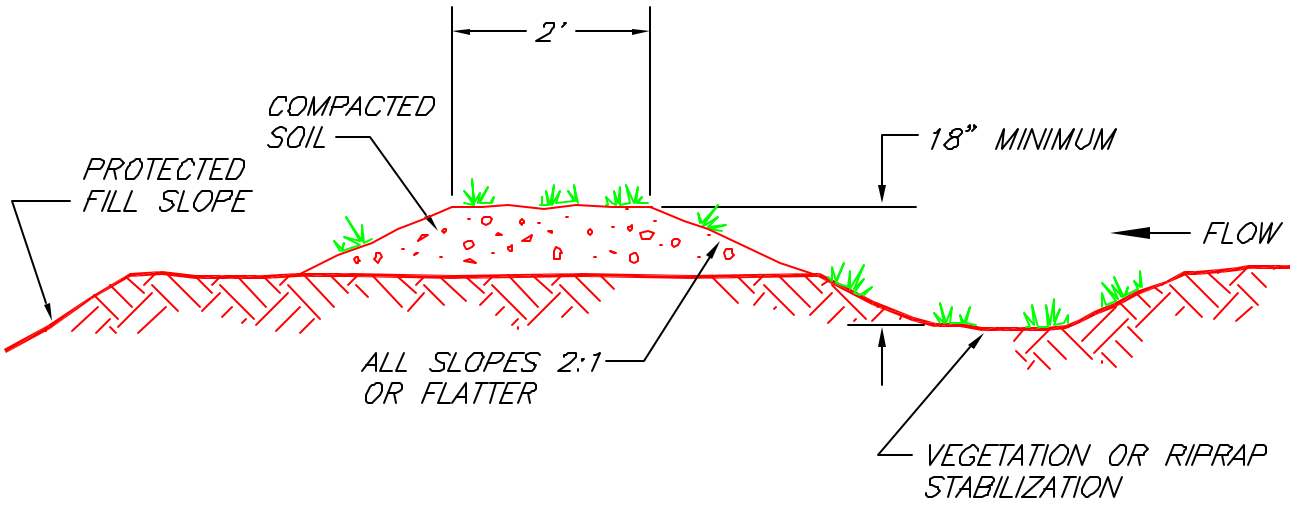

TYPICAL FILL DIVERSION

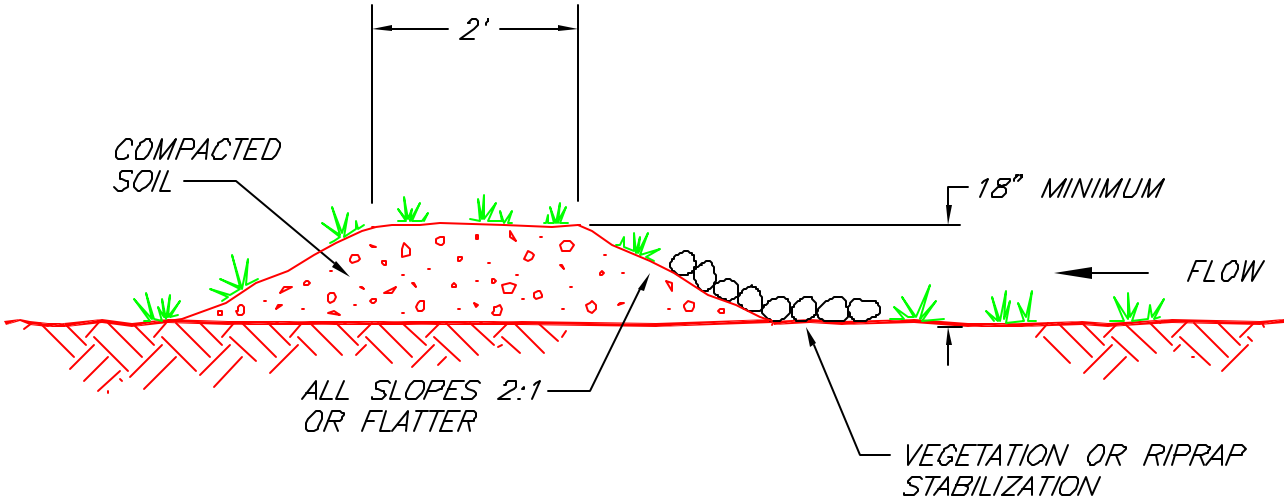

TYPICAL TEMPORARY DIVERSION DIKE

NOTES:
1. THE CHANNEL BEHIND THE DIKE SHALL HAVE POSITIVE GRADE TO A STABILIZED OUTLET.
2. THE DIKE SHALL BE ADEQUATELY COMPACTED TO PREVENT FAILURE.
3. THE DIKE SHALL BE STABILIZED WITH TEMPORARY OR PERMANENT SEEDING OR RIPRAP.

SOURCE: SALIX APPLIED EARTHCARE – EROSION DRAW 5.0

DIVERSION CHANNEL

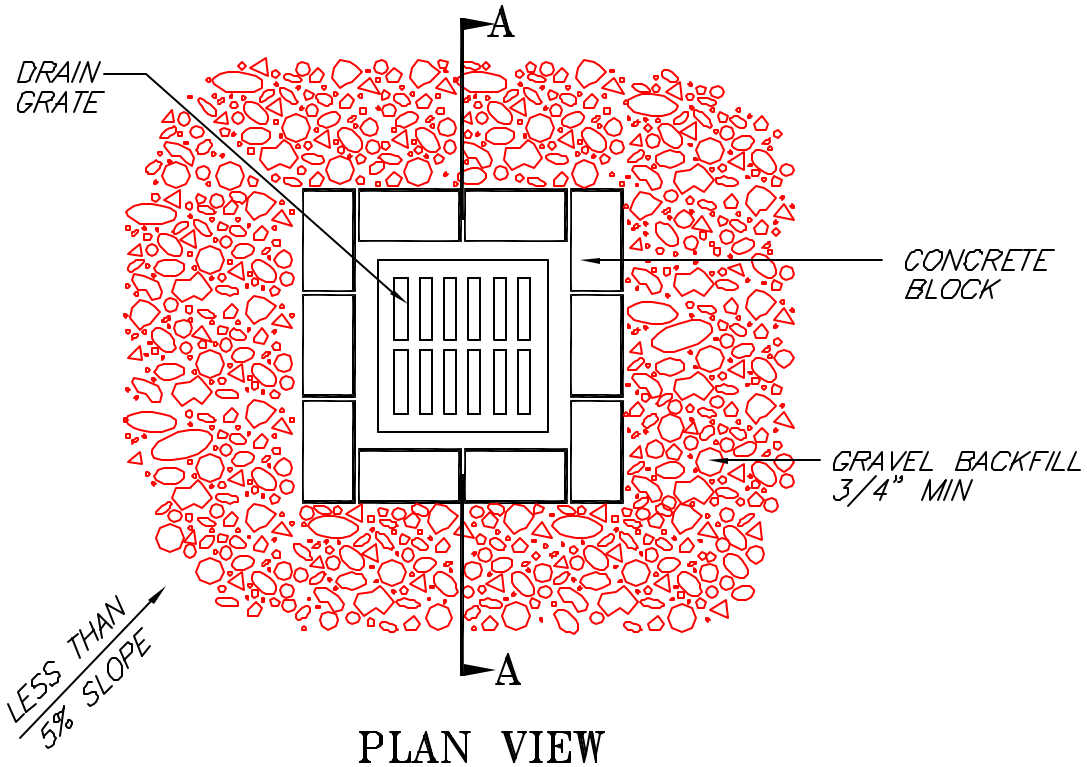

PLAN VIEW

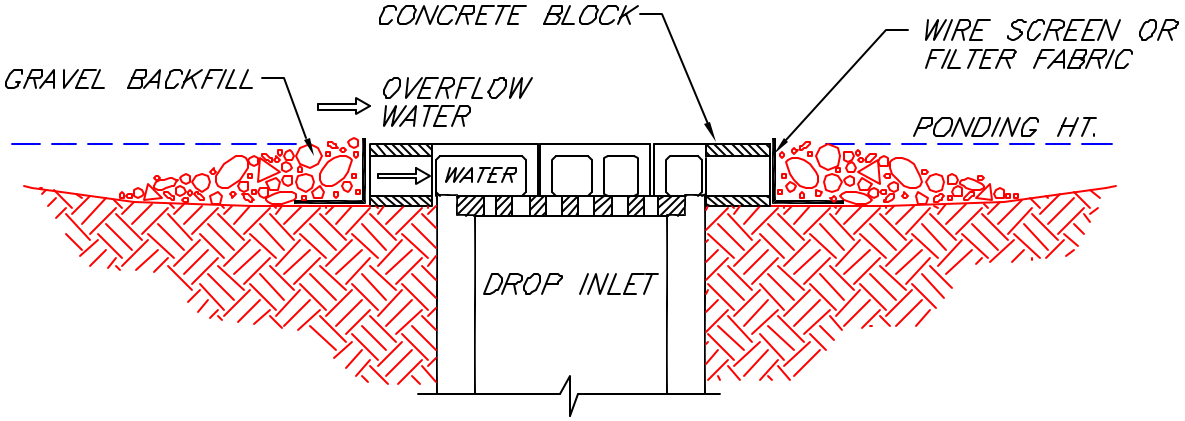

SECTION A – A

NOTES:

1. DROP INLET SEDIMENT BARRIERS ARE TO BE USED FOR SMALL, NEARLY LEVEL DRAINAGE AREAS. (LESS THAN 5%)

2. EXCAVATE A BASIN OF SUFFICIENT SIZE ADJACENT TO THE DROP INLET.

3. THE TOP OF THE STRUCTURE (PONDING HEIGHT) MUST BE WELL BELOW THE GROUND ELEVATION DOWNSLOPE TO PREVENT RUNOFF FROM BYPASSING THE INLET. A TEMPORARY DIKE MAY BE NECESSARY ON THE DOWNSLOPE SIDE OF THE STRUCTURE.

SOURCE: SALIX APPLIED EARTHCARE – EROSION DRAW 5.0

DROP INLET SEDIMENT BARRIER BLOCK AND GRAVEL

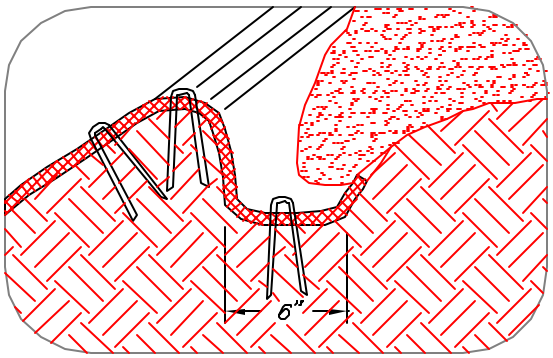

LONGITUDINAL ANCHOR TRENCH

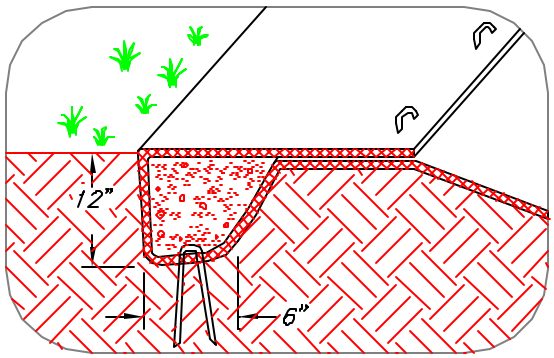

TERMINAL SLOPE AND CHANNEL ANCHOR TRENCH

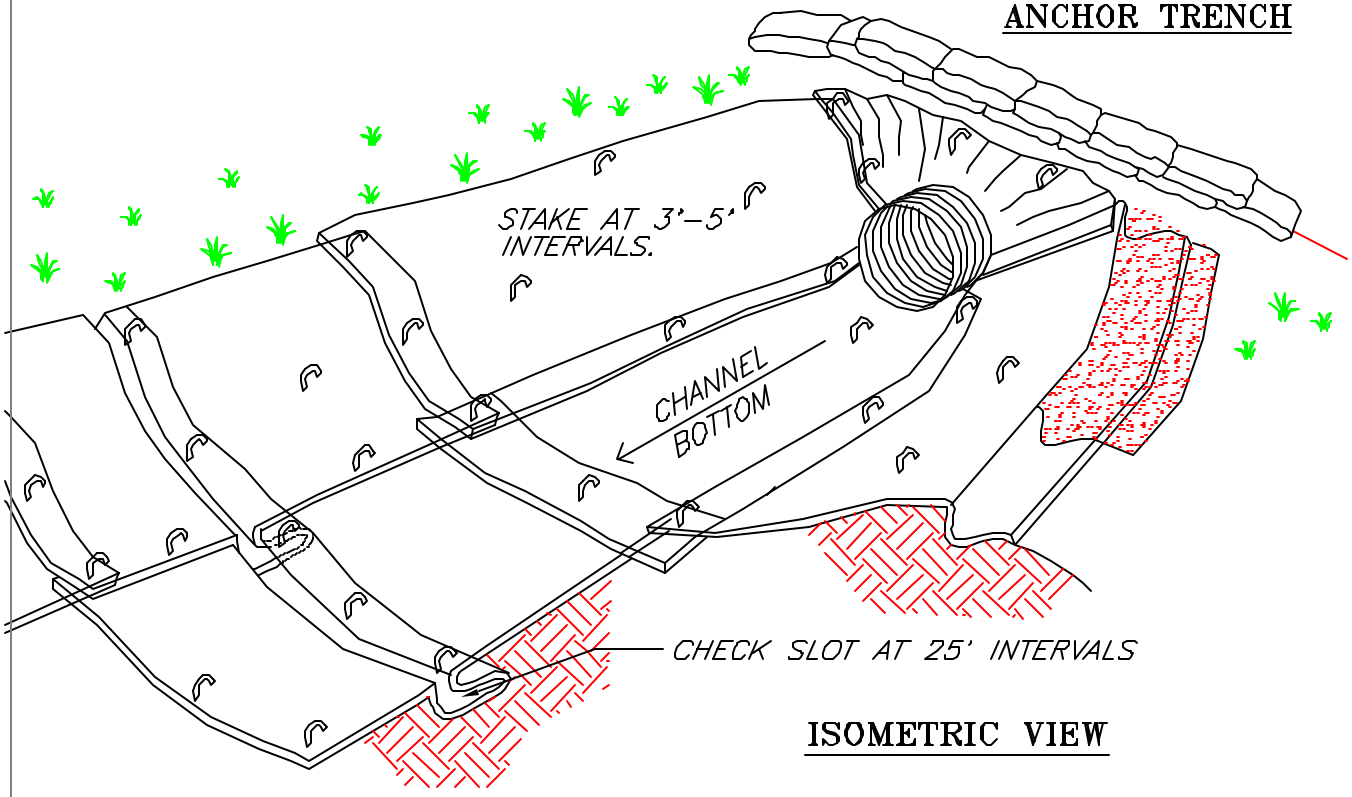

ISOMETRIC VIEW

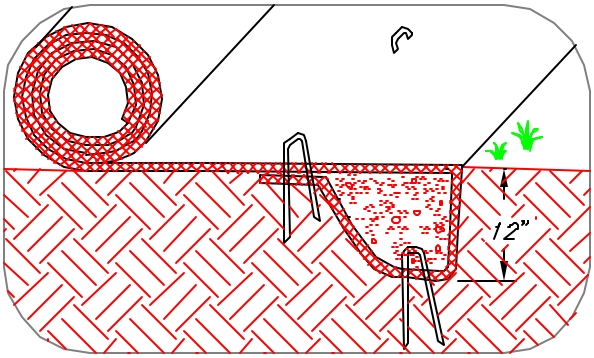

INITIAL CHANNEL ANCHOR TRENCH

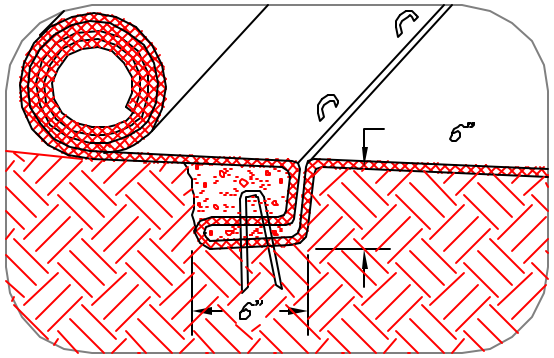

INTERMITTENT CHECK SLOT

NOTES:

1. CHECK SLOTS TO BE CONSTRUCTED PER MANUFACTURERS SPECIFICATIONS.

2. STAKING OR STAPLING LAYOUT PER MANUFACTURERS SPECIFICATIONS.

SOURCE: SALIX APPLIED EARTHCARE – EROSION DRAW 5.0

EROSION BLANKETS & TURF REINFORCEMENT MATS CHANNEL INSTALLATION

MATS/BLANKETS SHOULD BE INSTALLED VERTICALLY DOWNSLOPE.

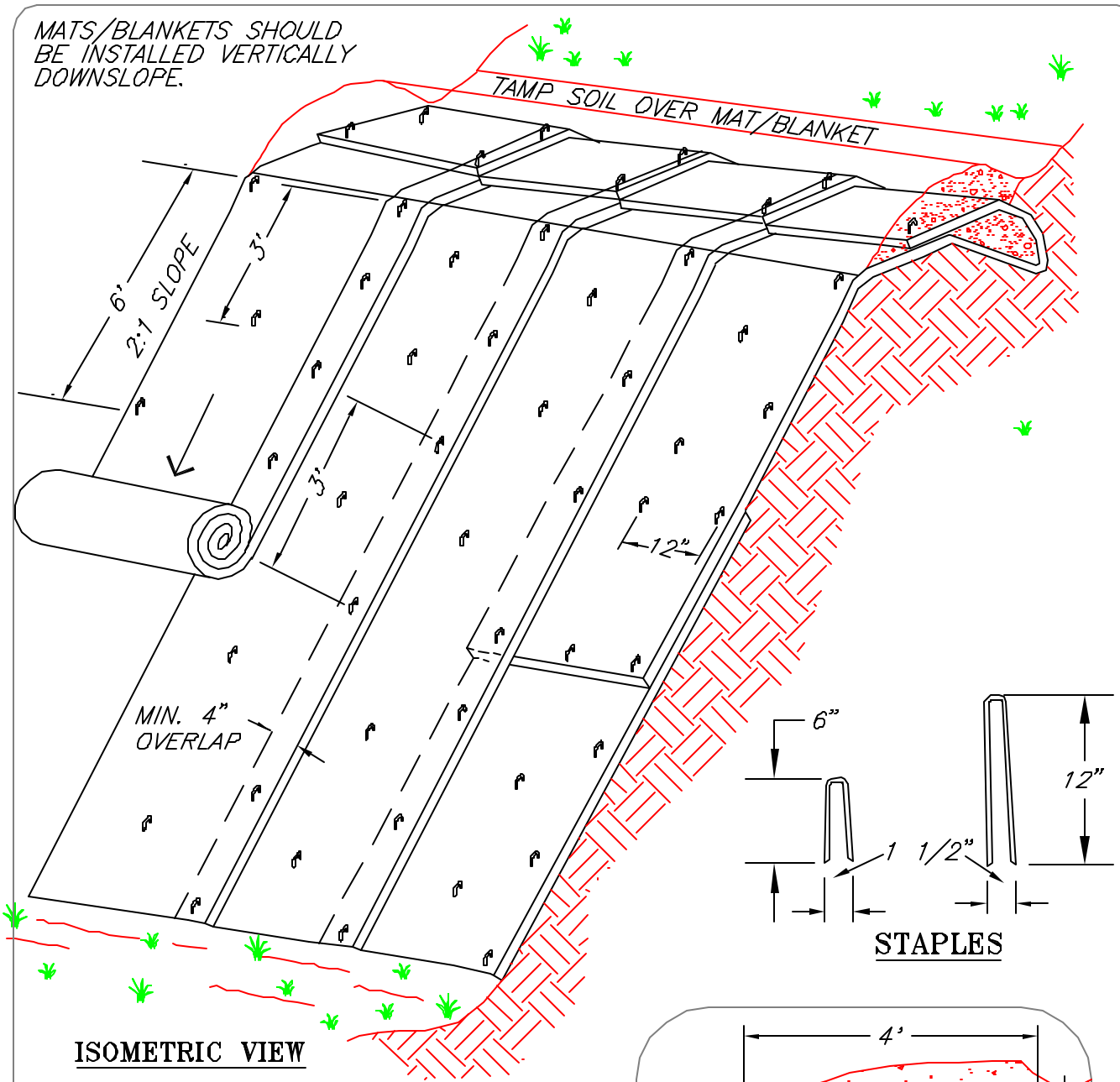

ISOMETRIC VIEW

STAPLES

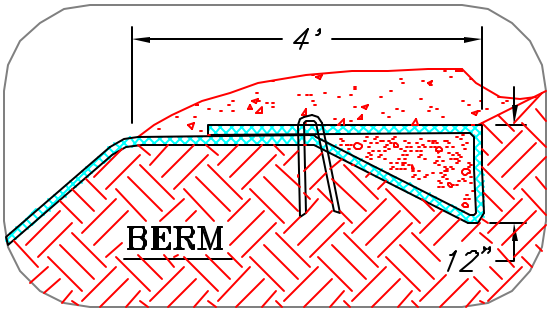

BERM

NOT TO SCALE

TYPICAL SLOPE SOIL STABILIZATION

NOTES:

1. SLOPE SURFACE SHALL BE FREE OF ROCKS, CLODS, STICKS AND GRASS. MATS/BLANKETS SHALL HAVE GOOD SOIL CONTACT.

2. APPLY PERMANENT SEEDING BEFORE PLACING BLANKETS.

3. LAY BLANKETS LOOSELY AND STAKE OR STAPLE TO MAINTAIN DIRECT CONTACT WITH THE SOIL. DO NOT STRETCH.

SOURCE: SALIX APPLIED EARTHCARE – EROSION DRAW 5.0

EROSION BLANKETS & TURF REINFORCEMENT MATS SLOPE INSTALLATION

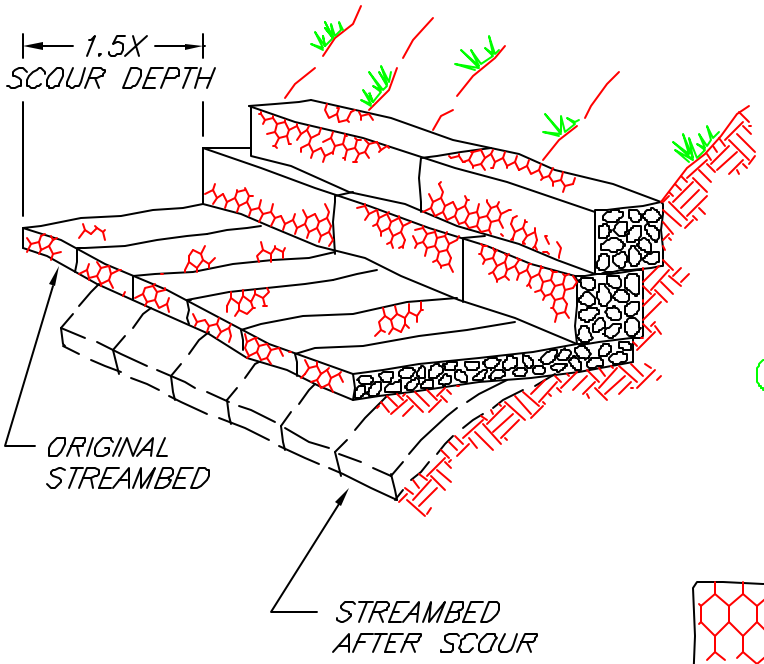

TYPICAL GABION APRON

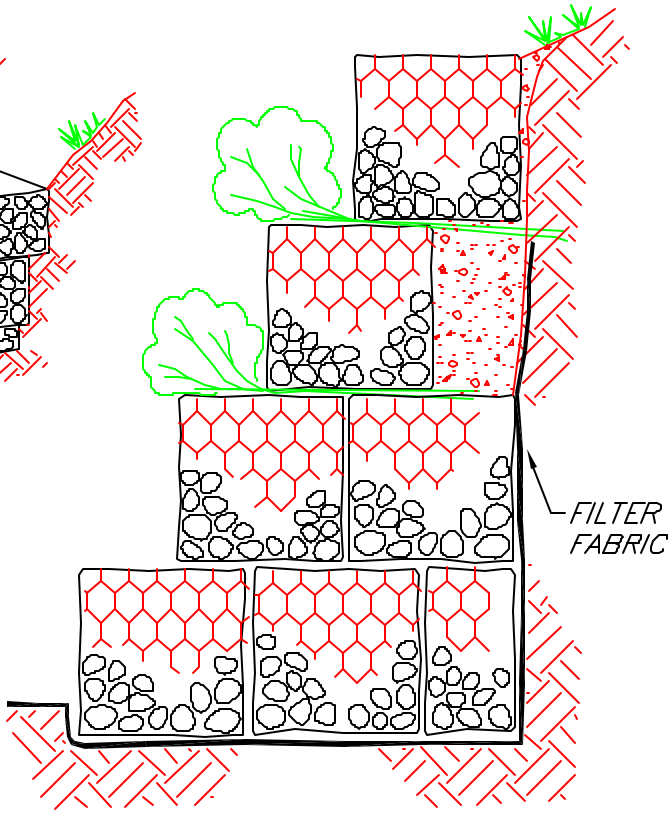

TYPICAL VEGETATED ROCK GABION

TYPICAL GABION AND GABION MATTRESS

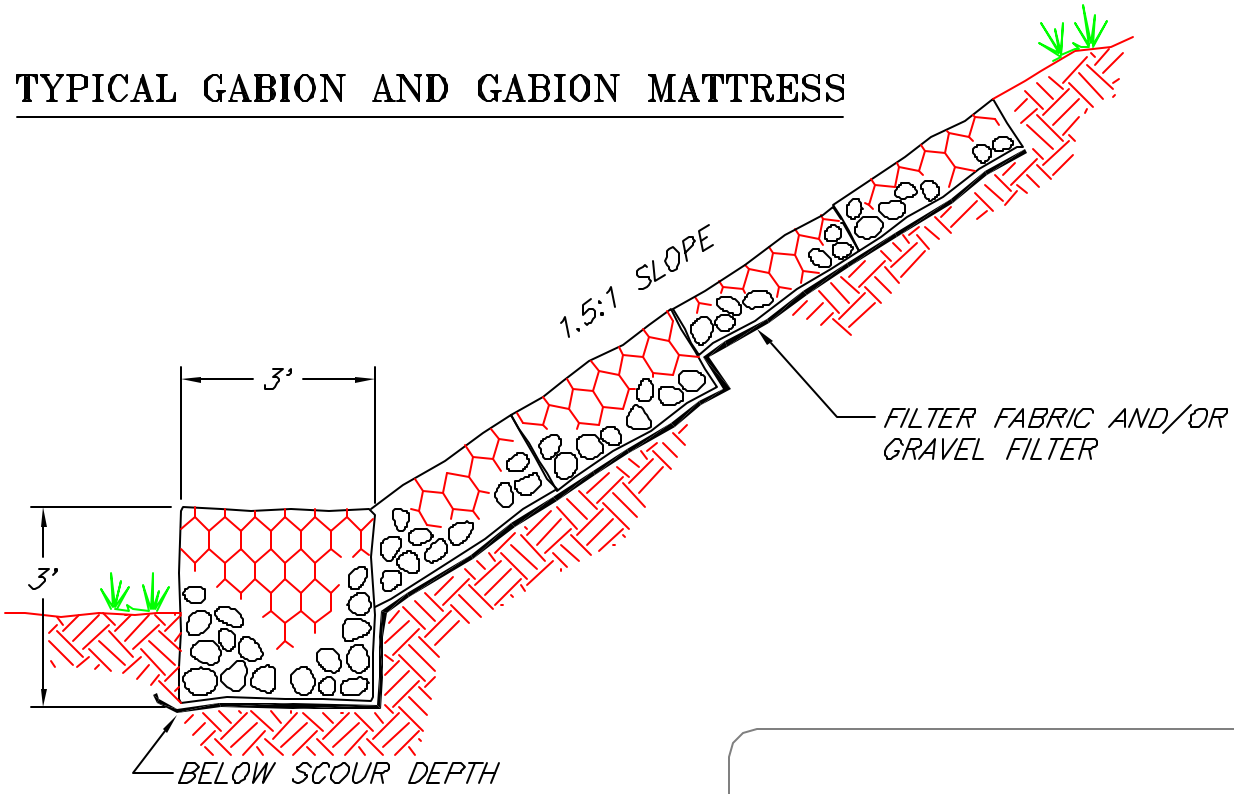

GABIONS

SOURCE: SALIX APPLIED EARTHCARE – EROSION DRAW 5.0

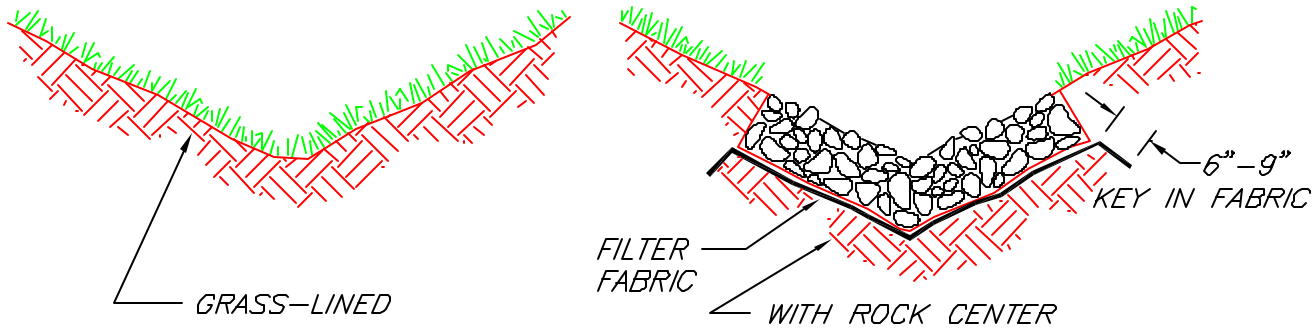

TYPICAL V–SHAPED CHANNEL CROSS–SECTION

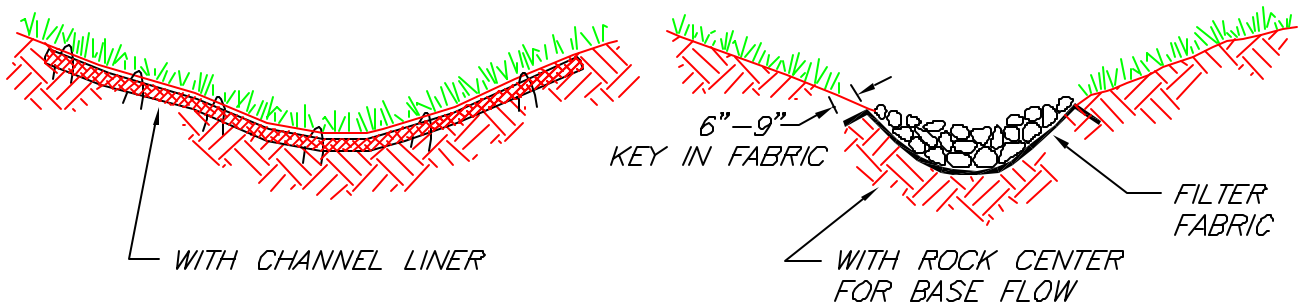

TYPICAL PARABOLIC CHANNEL CROSS–SECTION

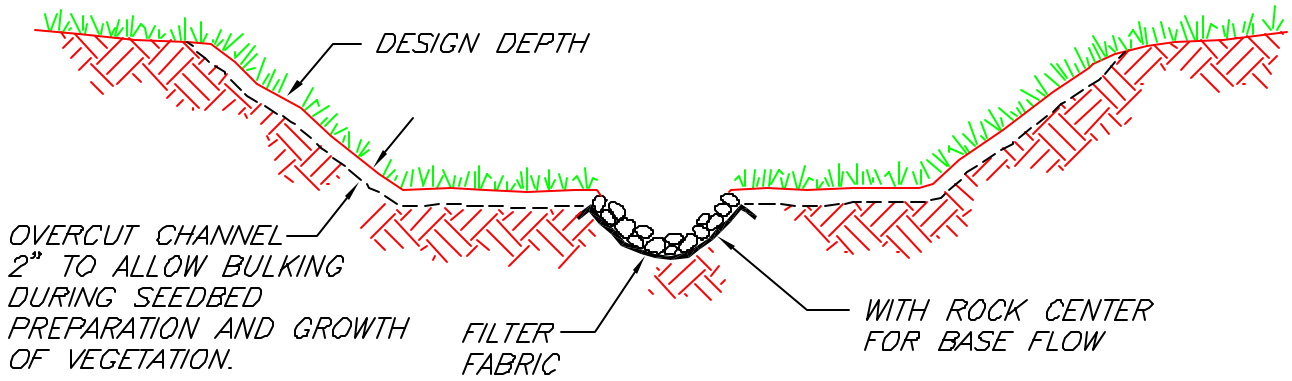

TYPICAL TRAPEZOIDAL CHANNEL CROSS–SECTION

SOURCE: SALIX APPLIED EARTHCARE – EROSION DRAW 5.0

GRASS–LINED CHANNEL
TYPICAL CROSS SECTIONS

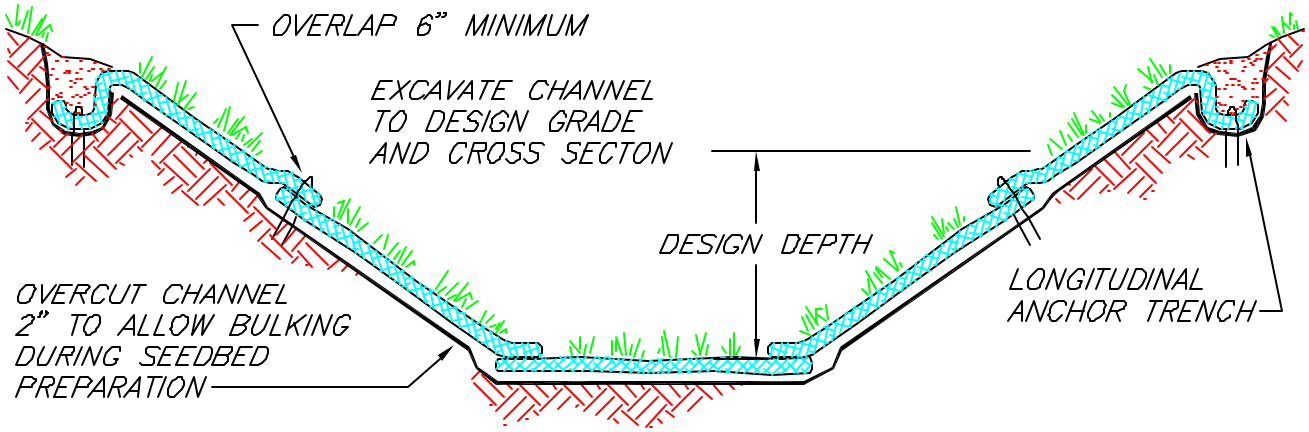

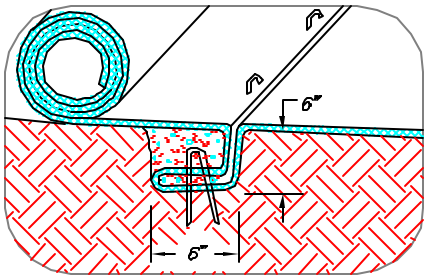

TYPICAL INSTALLATION WITH EROSION CONTROL BLANKETS OR TURF REINFORCEMENT MATS

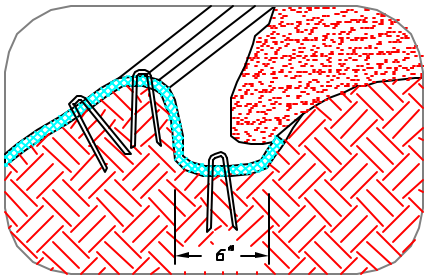

INTERMITTENT CHECK SLOT

LONGITUDINAL ANCHOR TRENCH

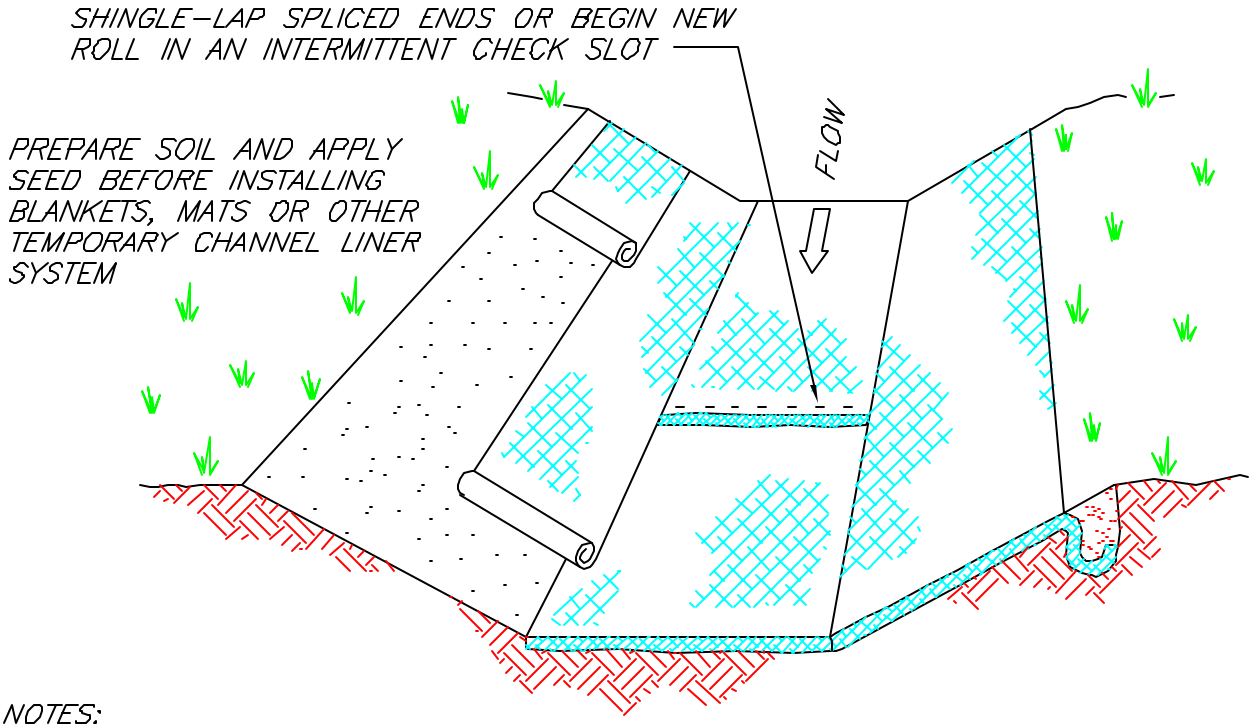

NOTES:
1. DESIGN VELOCITIES EXCEEDING 2 FT/SEC REQUIRE TEMPORARY BLANKETS, MATS OR SIMILAR LINERS TO PROTECT SEED AND SOIL UNTIL VEGETATION BECOMES ESTABLISHED.
2. GRASS-LINED CHANNELS WITH DESIGN VELOCITIES EXCEEDING 6 FT/SEC SHOULD INCLUDE TURF REINFORCEMENT MATS.

SOURCE: SALIX APPLIED EARTHCARE – EROSION DRAW 5.0

NOT TO SCALE

GRASS-LINED CHANNEL
TYPICAL INSTALLATION

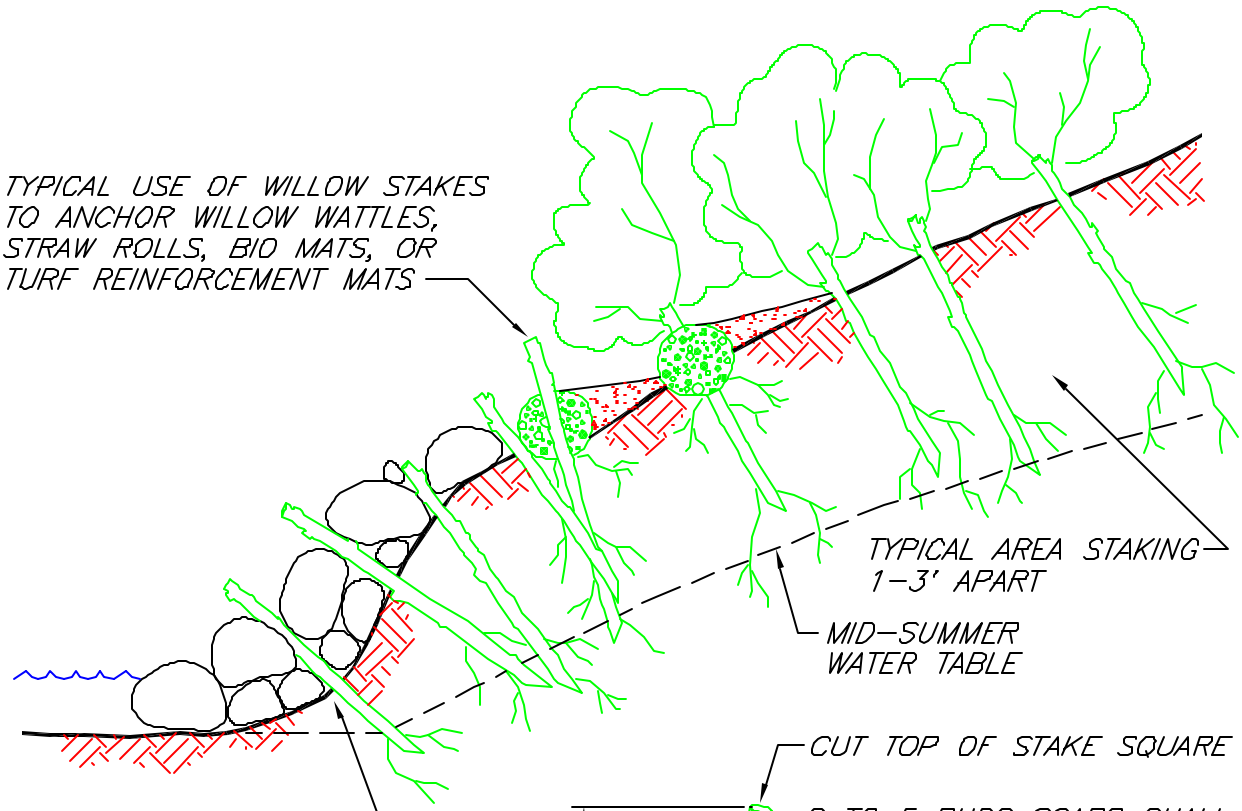

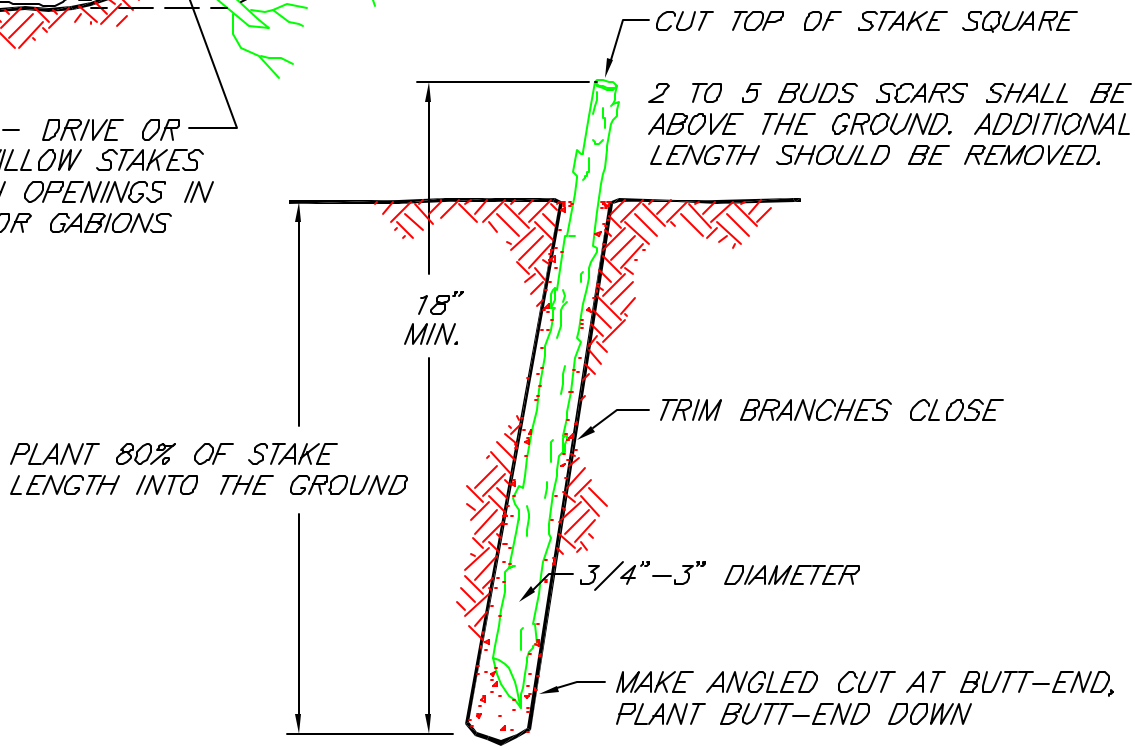

NOTES:
1. HARVEST AND PLANT STAKES DURING THE DORMANT SEASON.
2. USE HEALTHY, STRAIGHT AND LIVE WOOD AT LEAST 1 YEAR OLD.
3. MAKE CLEAN CUTS AND DO NOT DAMAGE STAKES OR SPLIT ENDS DURING INSTALLATION, USE A PILOT BAR IN FIRM SOILS.
4. SOAK CUTTINGS FOR 24 HOURS (MIN.) PRIOR TO INSTALLATION.
5. TAMP THE SOIL AROUND THE STAKE.

SOURCE: SALIX APPLIED EARTHCARE - EROSION DRAW 5.0

NOT TO SCALE

LIVE STAKING

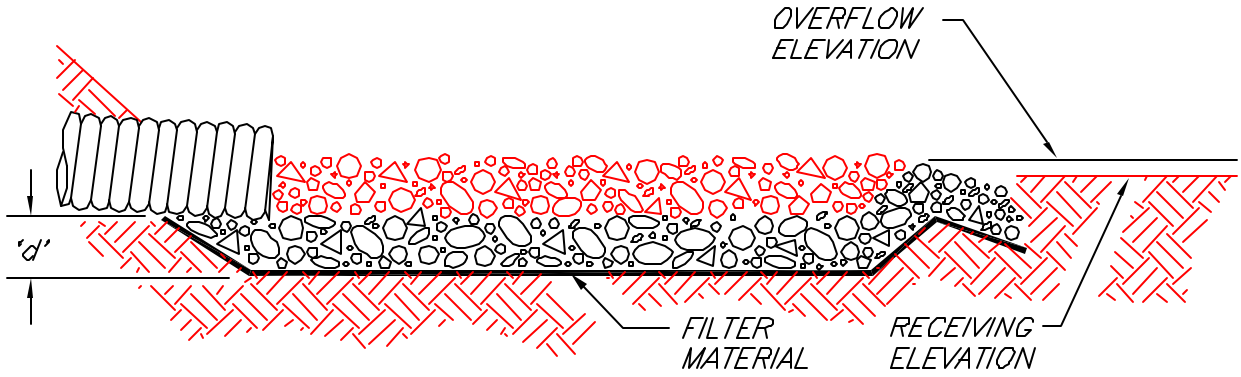

THICKNESS ('d') = 1.5 x MAX. ROCK DIAMETER – 6" MIN.

SECTION

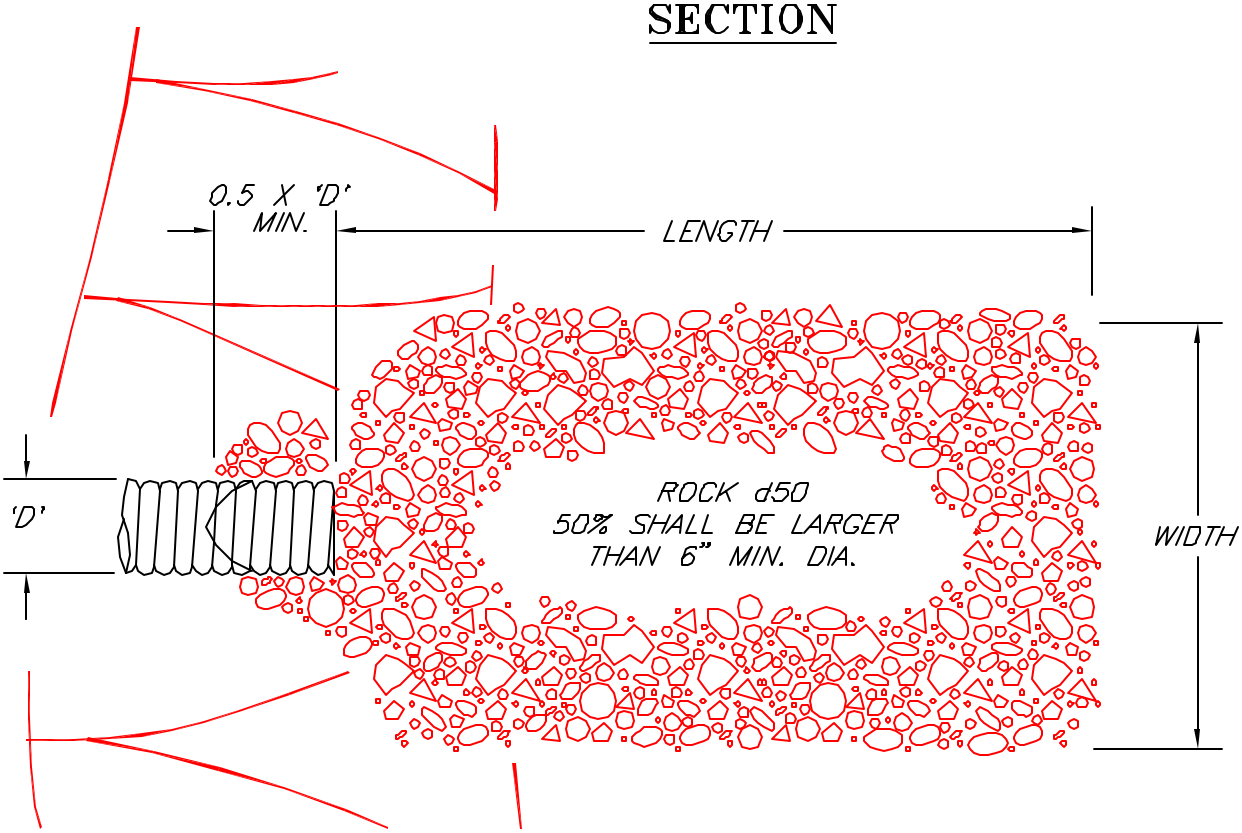

PLAN

NOTES:

1. THE LENGTH AND WIDTH SHALL BE DETERMINED BY THE ENGINEER.
2. APRON SHALL BE SET AT A ZERO GRADE AND ALIGNED STRAIGHT.
3. FILTER MATERIAL SHALL BE FILTER FABRIC OR 6" THICK MINIMUM GRADED GRAVEL LAYER.

OUTLET PROTECTION ENERGY DISSIPATOR

SOURCE: SALIX APPLIED EARTHCARE – EROSION DRAW 5.0

DESIGN HEIGHT (H), WIDTH AND STONE SIZE SHALL BE DETERMINED BY THE ENGINEER

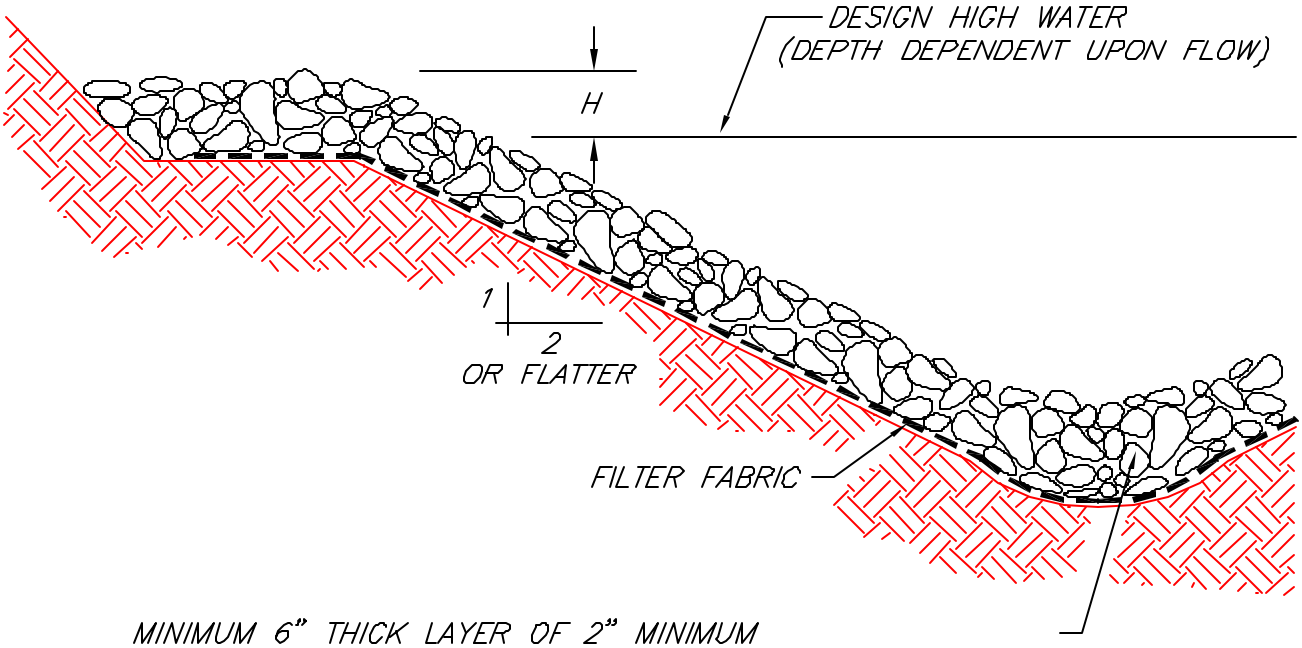

MINIMUM 6" THICK LAYER OF 2" MINIMUM DIAMETER DRAIN ROCK. LARGER STONE SHALL BE USED DEPENDENT UPON GRADIENT, SOIL TYPE, AND DESIGN FLOW.

TYPICAL SECTION

ROCK LINED CHANNEL

SOURCE: SALIX APPLIED EARTHCARE – EROSION DRAW 5.0

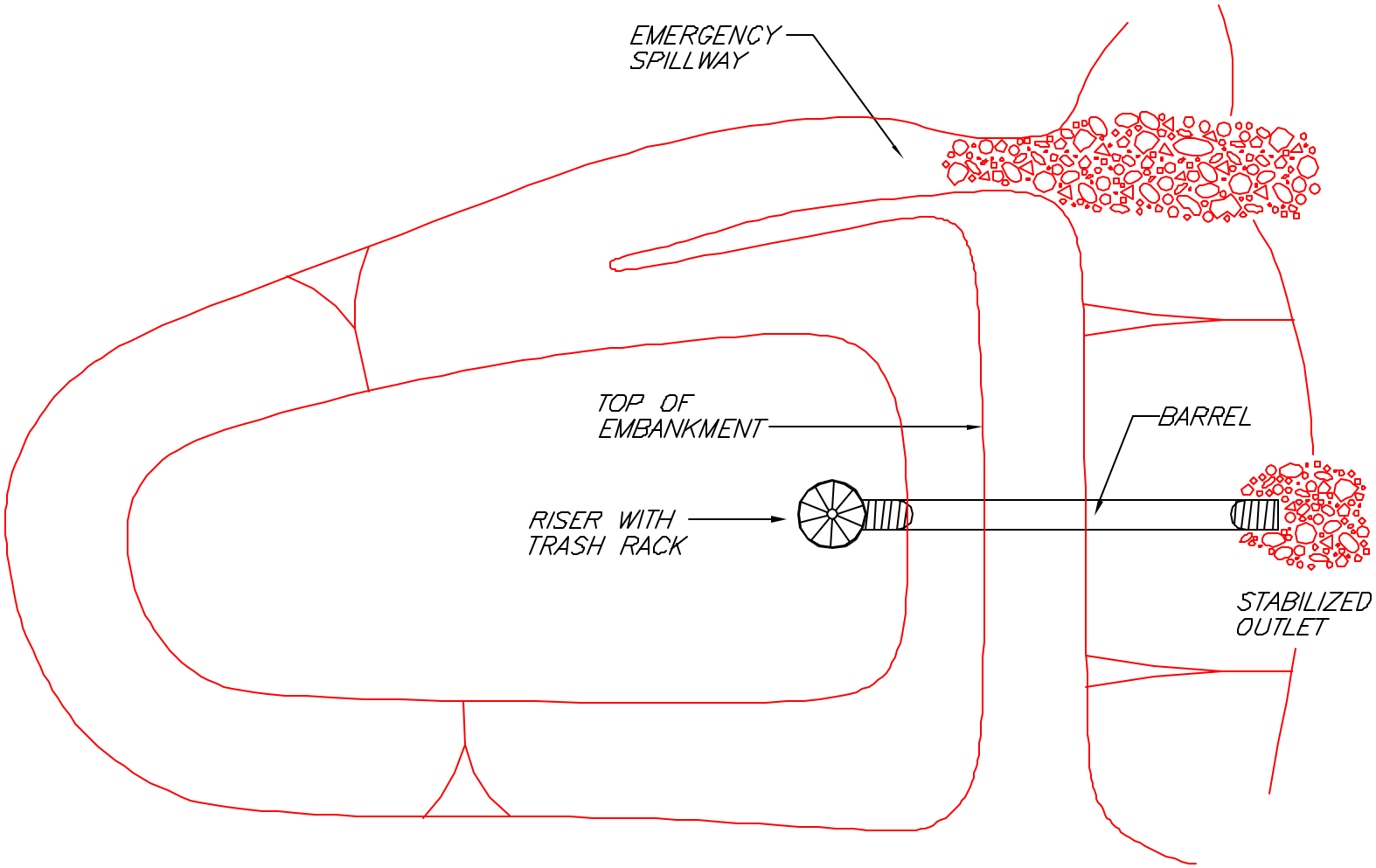

NOTE:
A SEDIMENT BASIN IS REQUIRED FOR DISTURBED AREAS GREATER THAN 10 ACRES.

PLAN

SEDIMENT BASIN

SOURCE: SALIX APPLIED EARTHCARE – EROSION DRAW 5.0

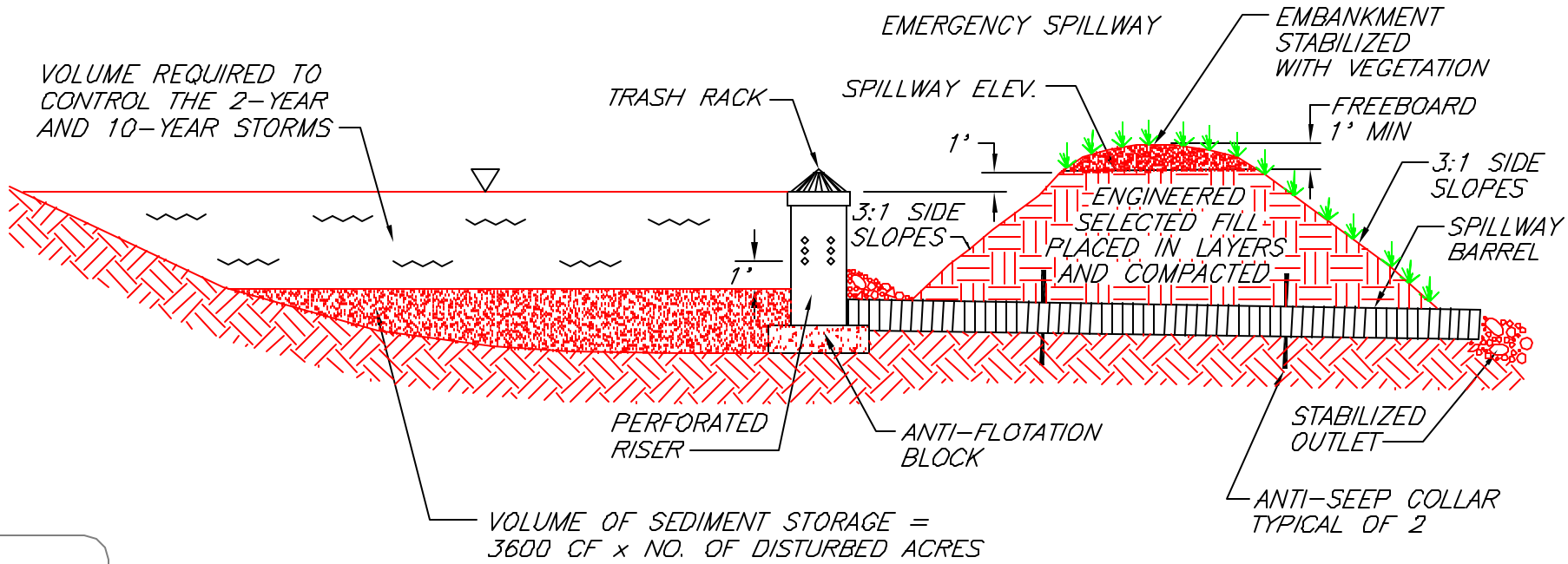

NOTE:
A SEDIMENT BASIN IS REQUIRED FOR DISTURBED AREAS GREATER THAN 10 ACRES.

SECTION

SEDIMENT BASIN

SOURCE: SALIX APPLIED EARTHCARE - EROSION DRAW 5.0

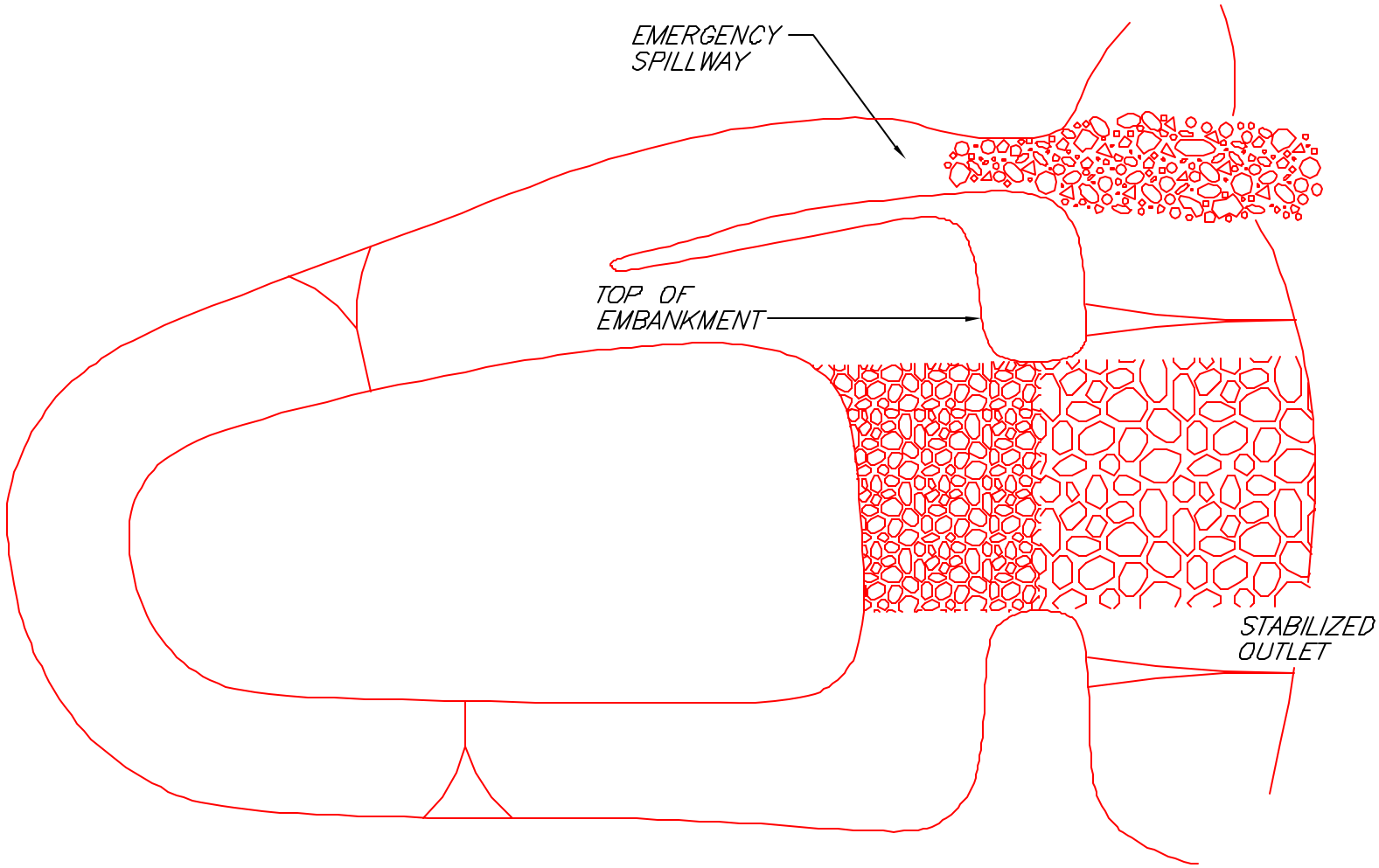

NOTE:
A SEDIMENT TRAP CAN BE USED FOR DISTURBED AREAS LESS THAN 5 ACRES.

PLAN

SEDIMENT TRAP

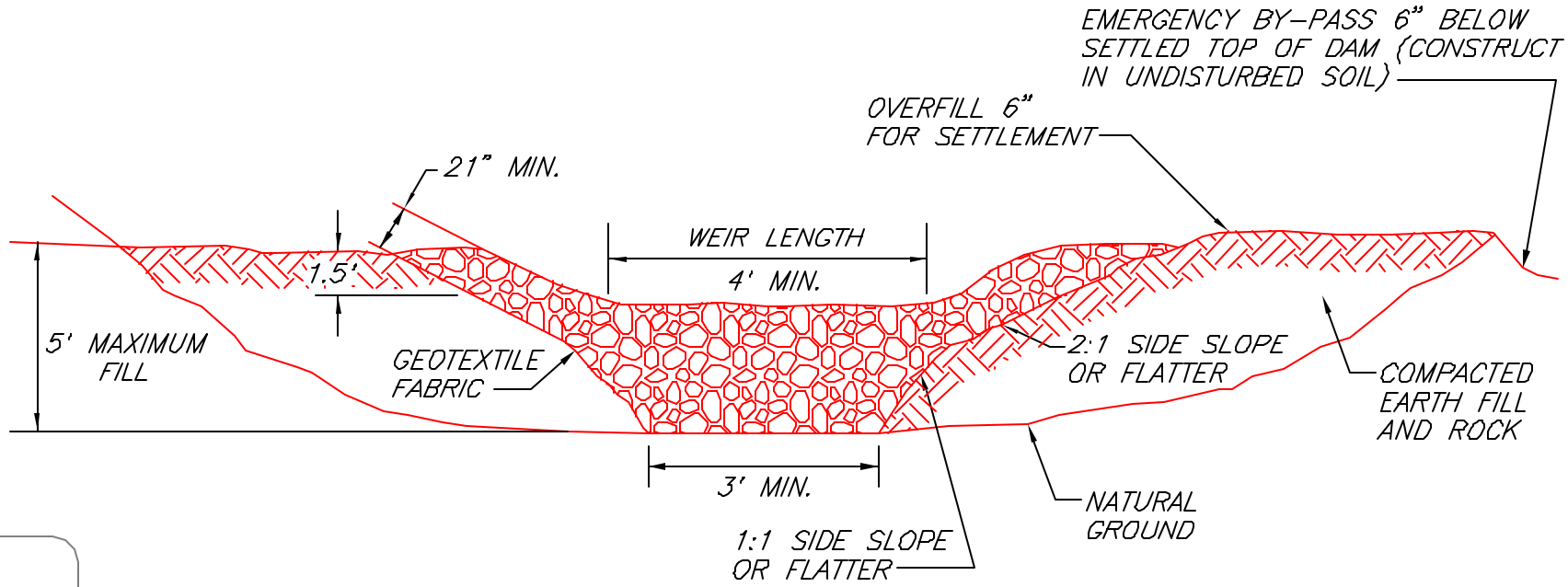

NOTE:

A SEDIMENT TRAP CAN BE USED FOR DISTURBED AREAS LESS THAN 5 ACRES.

EMBANKMENT AND SPILLWAY ELEVATION

SEDIMENT TRAP

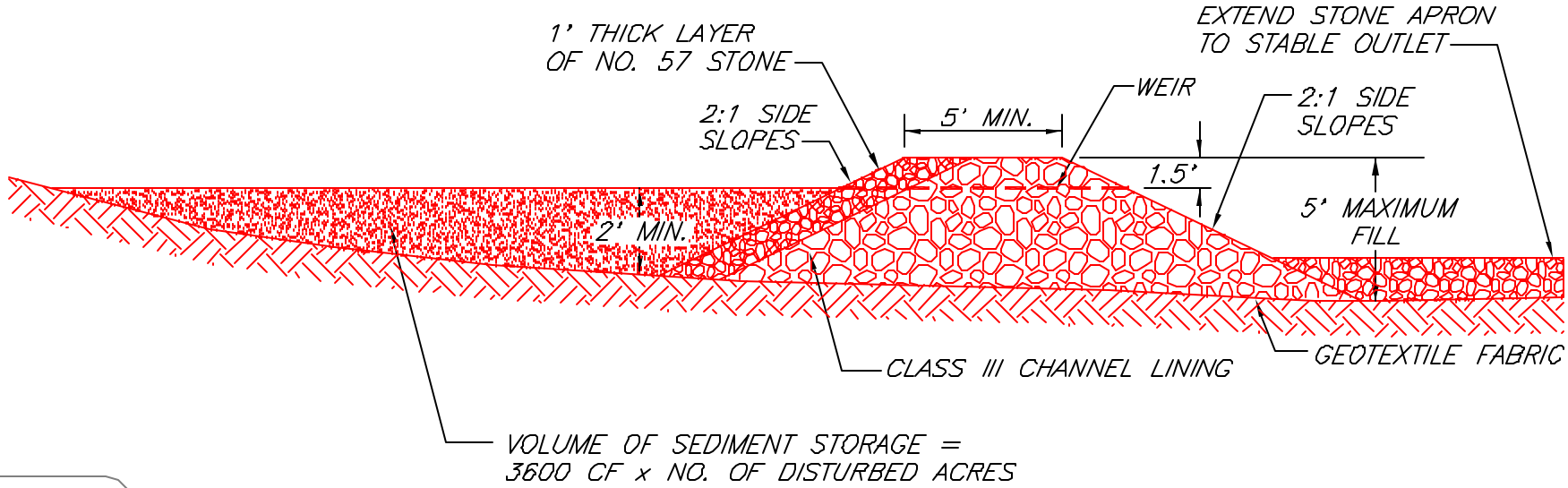

NOTE:
A SEDIMENT TRAP CAN BE USED FOR DISTURBED AREAS LESS THAN 5 ACRES.

STONE SECTION

SEDIMENT TRAP

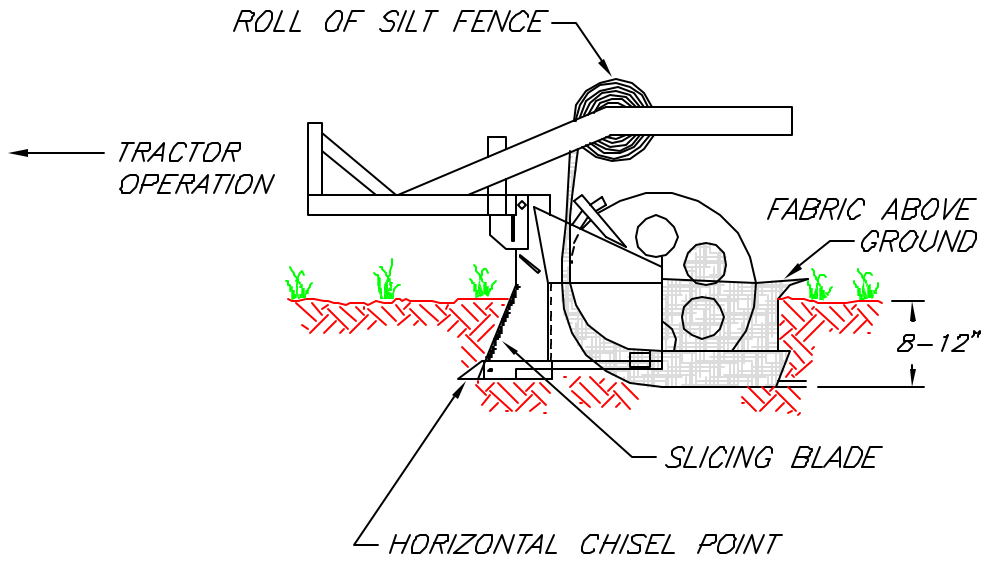

STATIC SLICING METHOD
SIDE VIEW

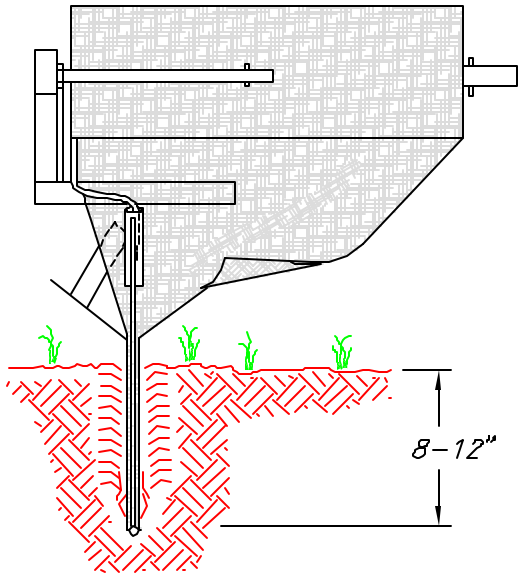

STATIC SLICING METHOD
BACK VIEW

SILT FENCE INSTALLATION SLICING METHOD

SOURCE: SALIX APPLIED EARTHCARE - EROSION DRAW 5.0

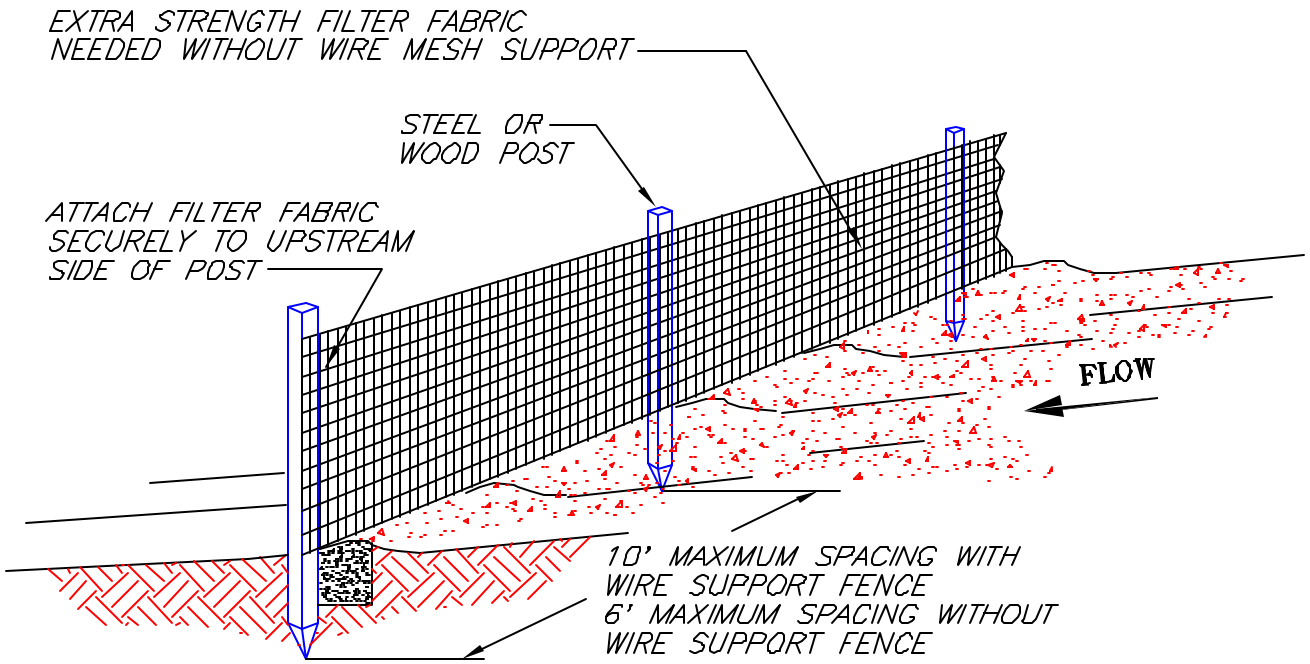

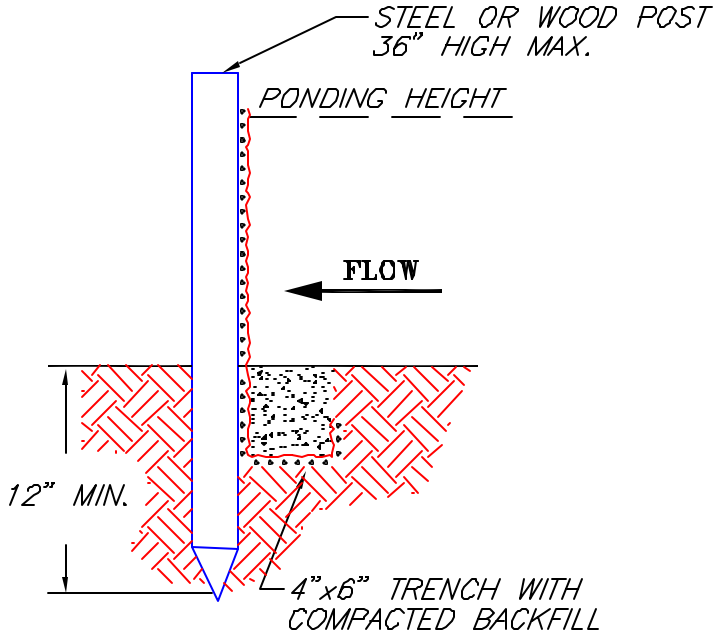

TRENCH DETAIL

NOTES:

1. SILT FENCE SHALL BE PLACED ON SLOPE CONTOURS TO MAXIMIZE PONDING EFFICIENCY.

2. INSPECT AND REPAIR FENCE AFTER EACH STORM EVENT AND REMOVE SEDIMENT WHEN NECESSARY. 9" MAXIMUM RECOMMENDED STORAGE HEIGHT.

3. REMOVED SEDIMENT SHALL BE DEPOSITED TO AN AREA THAT WILL NOT CONTRIBUTE SEDIMENT OFF-SITE AND CAN BE PERMANENTLY STABILIZED.

SOURCE: SALIX APPLIED EARTHCARE – EROSION DRAW 5.0

NOT TO SCALE

SILT FENCE INSTALLATION TRENCH METHOD

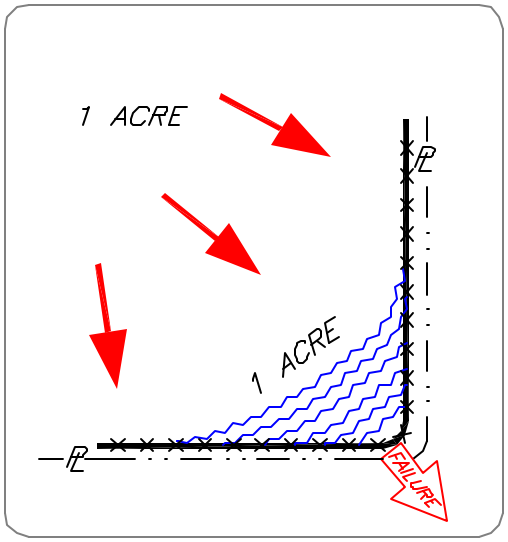

Incorrect – Do Not layout "perimeter control" silt fences along property lines. All sediment laden runoff will concentrate and overwhelm the system.

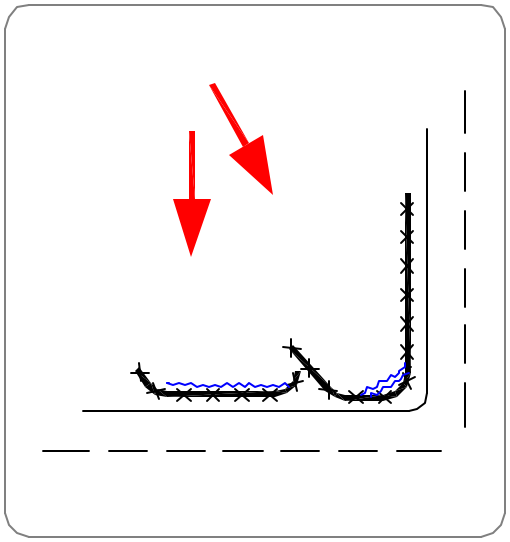

Correct – Install J–hooks

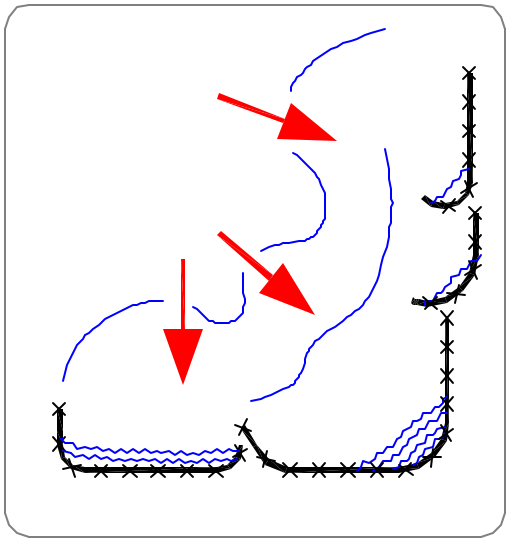

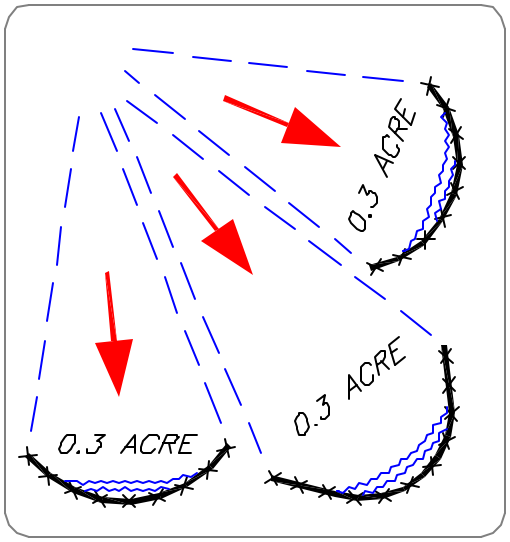

Discreet segments of silt fence, installed with J–hooks will be much more effective.

SILT FENCE PLACEMENT FOR PERIMETER CONTROL

SOURCE: SALIX APPLIED EARTHCARE – EROSION DRAW 5.0

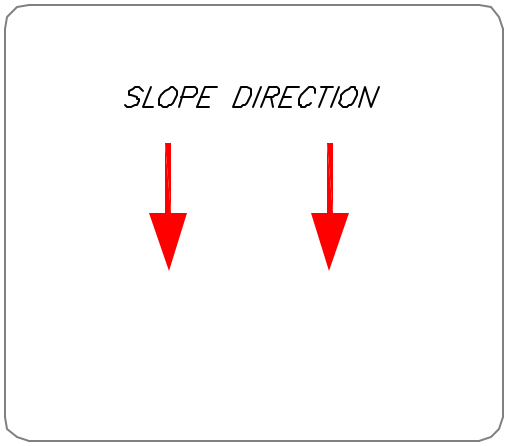

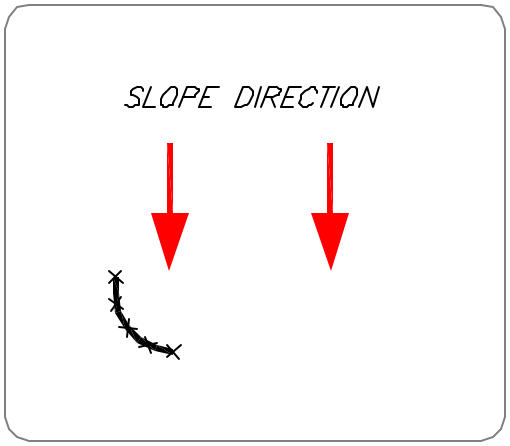

STEP 1 – CONSTRUCT LEG

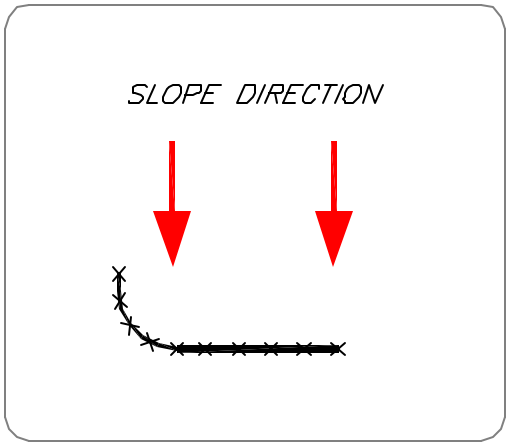

STEP 2 – CONSTRUCT DAM

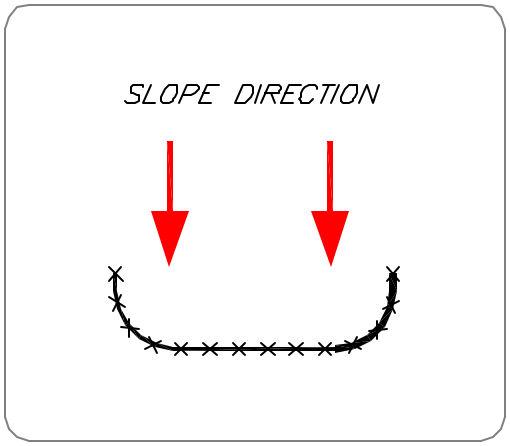

STEP 3 – CONSTRUCT LEG 2

INSTALLATION WITH J–HOOKS INCREASE SILT FENCE EFFICIENCY.

SOURCE: SALIX APPLIED EARTHCARE – EROSION DRAW 5.0

SILT FENCE TYPICAL PLACEMENT ONE SLOPE

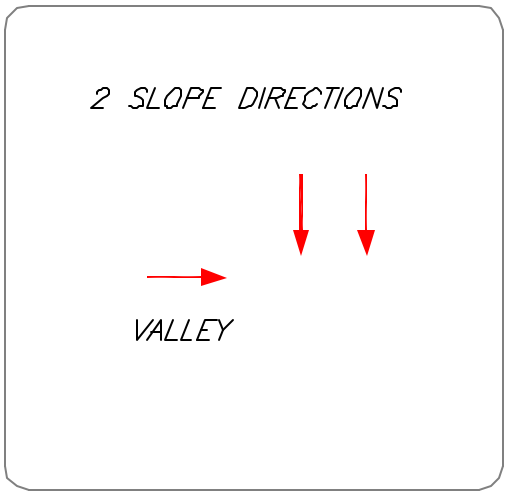

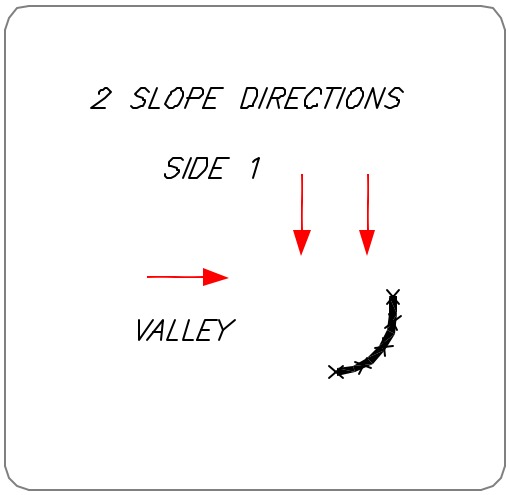

STEP 1 – CONSTRUCT A DAM

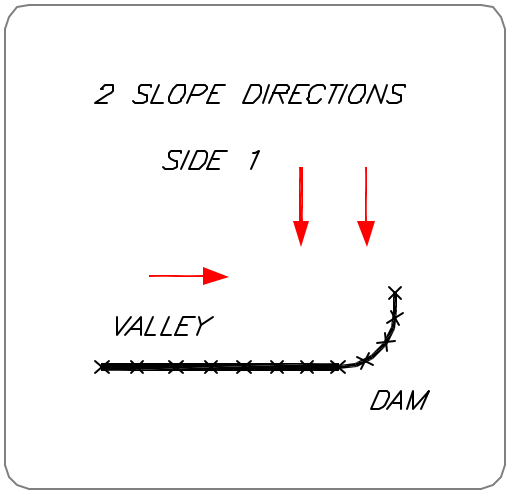

STEP 2 – CONSTRUCT SIDE 2

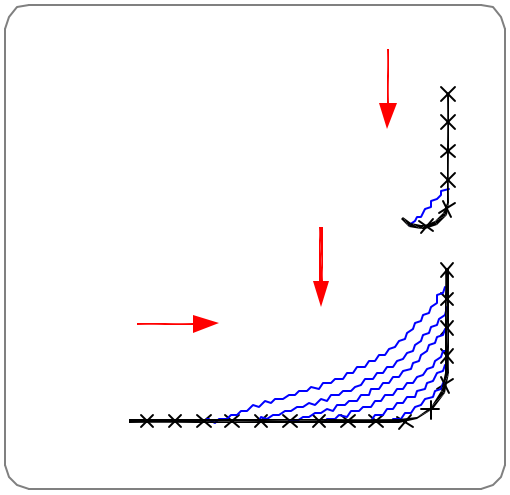

STEP 3 – CONSTRUCT J–HOOKS AS NEEDED

INSTALLATION WITH J–HOOKS WILL INCREASE SILT FENCE EFFICIENCY AND REDUCE EROSION–CAUSING FAILURES.

SOURCE: SALIX APPLIED EARTHCARE – EROSION DRAW 5.0

SILT FENCE TYPICAL PLACEMENT TWO SLOPES

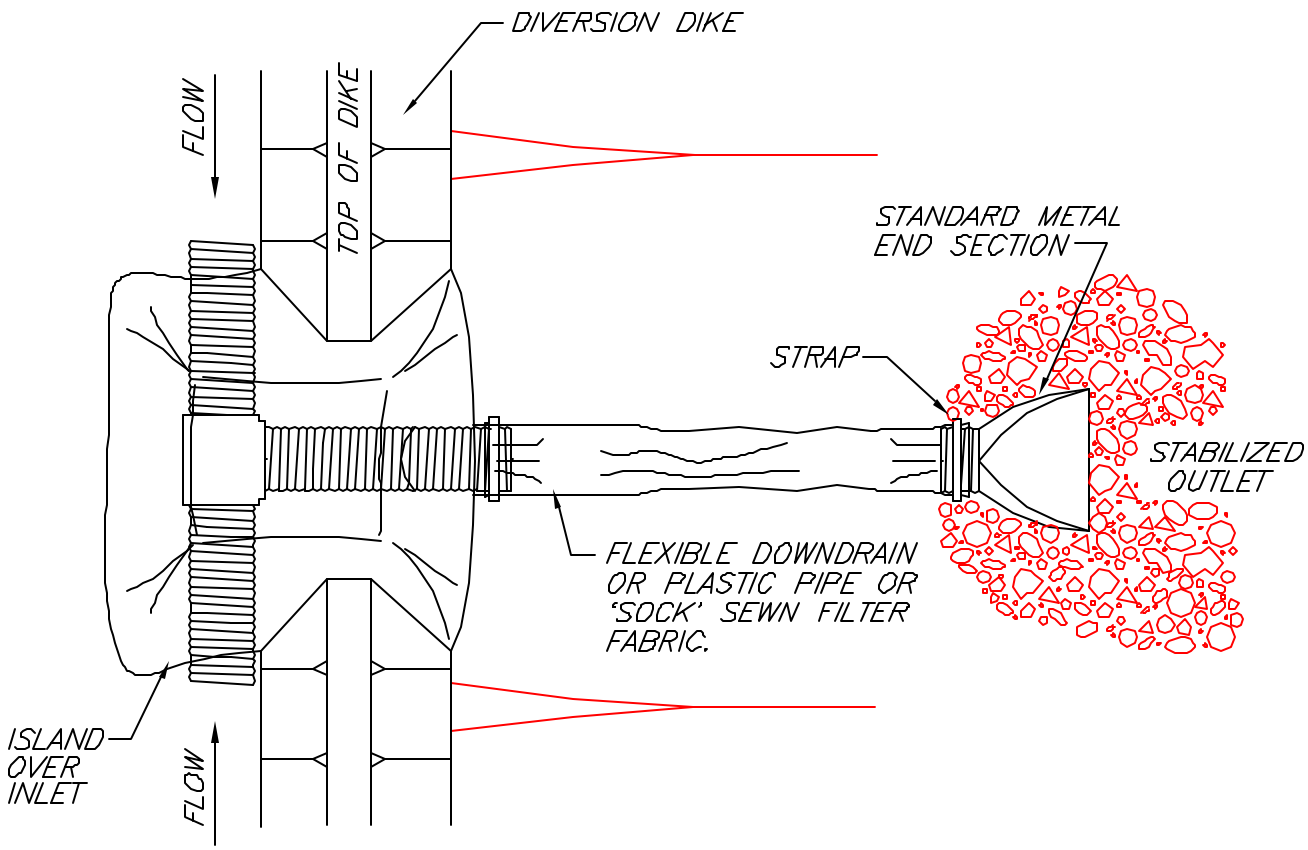

PLAN VIEW

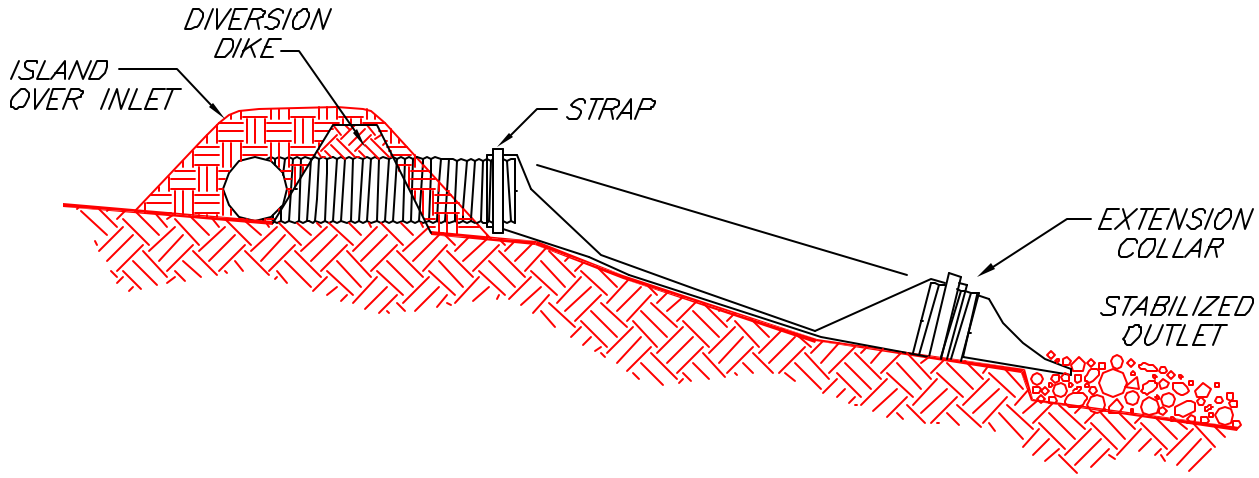

SECTION

SLOPE DRAIN

SOURCE: SALIX APPLIED EARTHCARE – EROSION DRAW 5.0

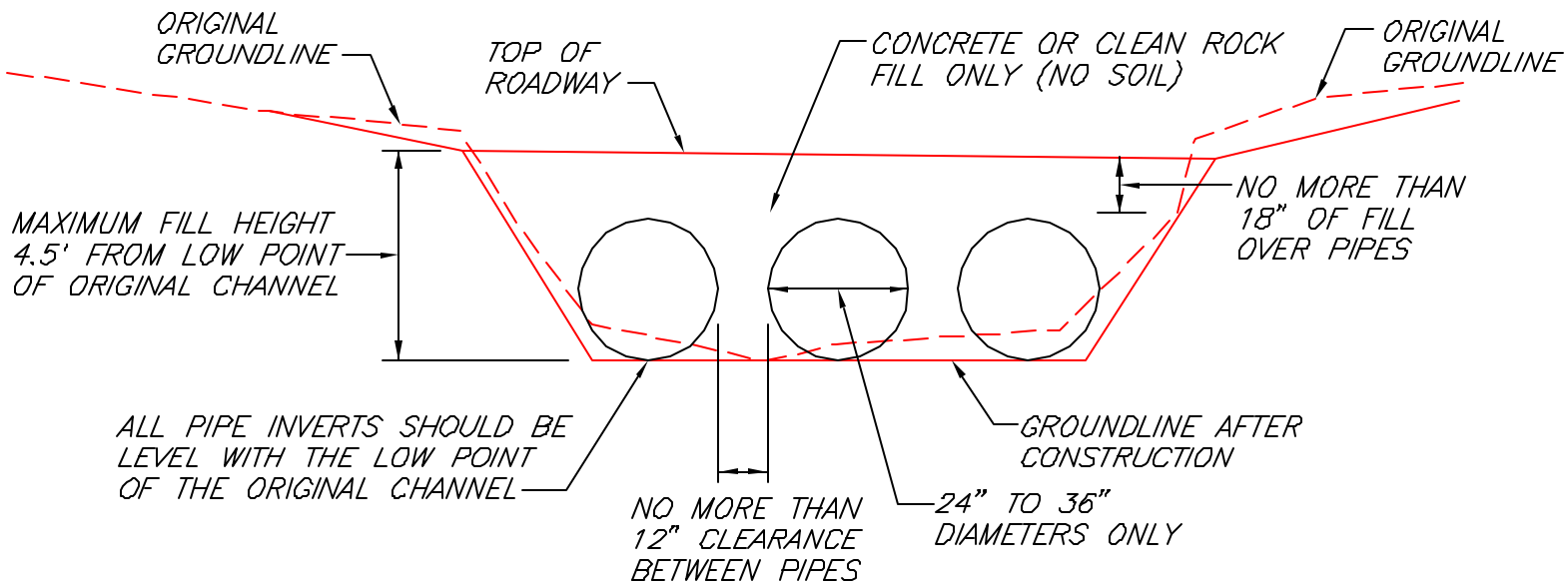

NOTES

1. THIS IS A CONCEPTUAL DRAWING. THE NUMBER AND SIZE OF PIPES AND OTHER DETAILS WILL VARY DEPENDING ON SPECIFIC SITE CONDITIONS.
2. THE PIPES AND BACKFILL MUST BE CONTAINED WITHIN THE STREAM CHANNEL AS SHOWN ABOVE. DURING THE CONSTRUCTION OF THE APPROACHES AND ACCESS ROADWAY ACROSS THE FLOODPLAIN, UNSTABLE AND UNCONSOLIDATED MATERIALS UNSUITABLE FOR ROADWAYS MAY BE EXCAVATED AND REPLACED WITH RIPRAP, CRUSHED STONE, OR OTHER STABLE ROAD CONSTRUCTION MATERIALS. THIS MAY ONLY BE DONE, HOWEVER, WITH THE FOLLOWING PROVISIONS: (1) THE DISPOSAL OF EXCESS, UNCONSOLIDATED MATERIALS THUS EXCAVATED MUST BE OUTSIDE OF THE FLOODPLAIN AND (2) THE FINISHED SURFACE OF THE COMPLETED ROAD MAY BE NO MORE THAN THREE INCHES (3") ABOVE THE PRE-CONSTRUCTION SURFACE OF THE FLOODPLAIN AT ANY POINT BEYOND THE TOP OF BANKS.

STREAM CROSSING

KY DIVISION OF WATER
LOW-WATER CROSSING

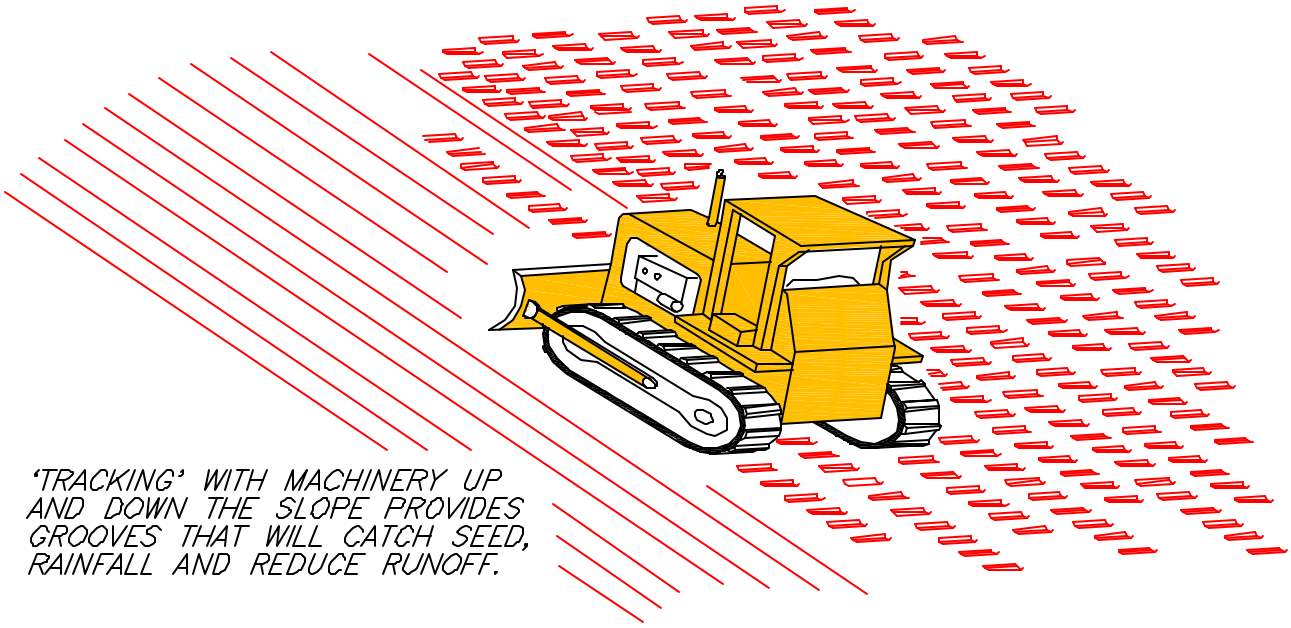

TRACKING

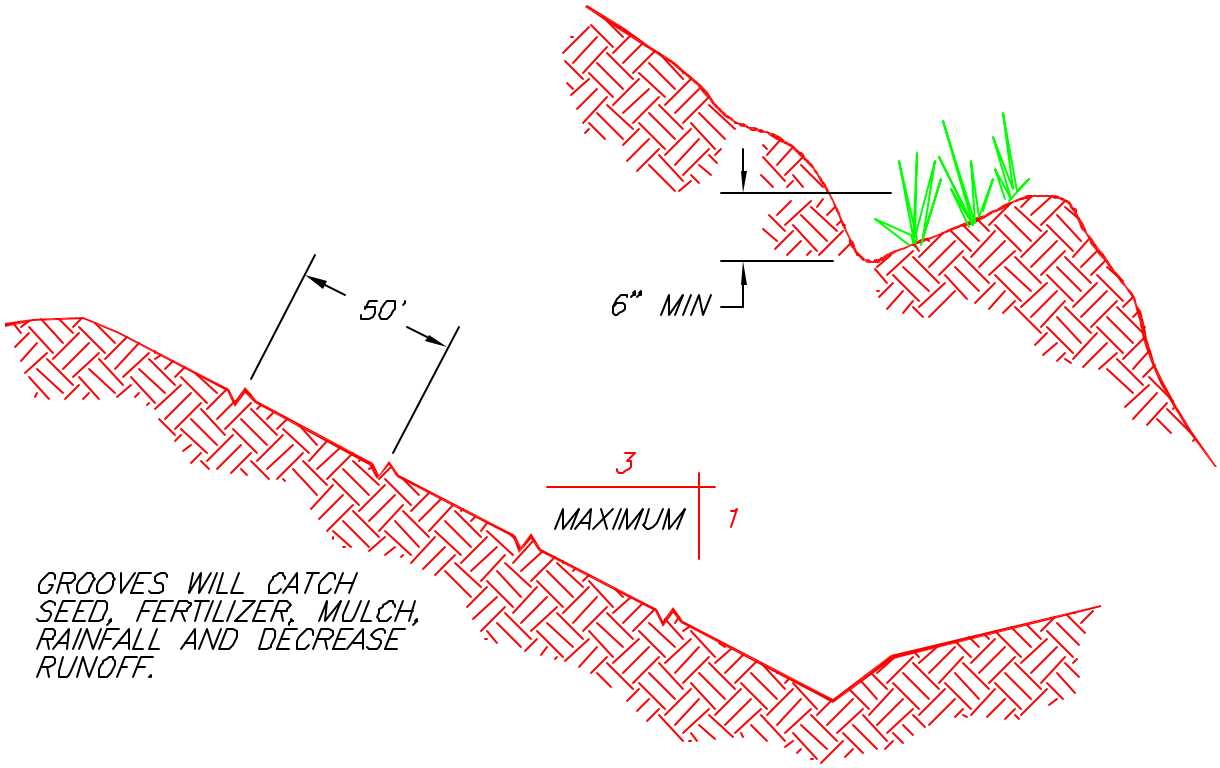

CONTOUR FURROWS

SURFACE ROUGHENING

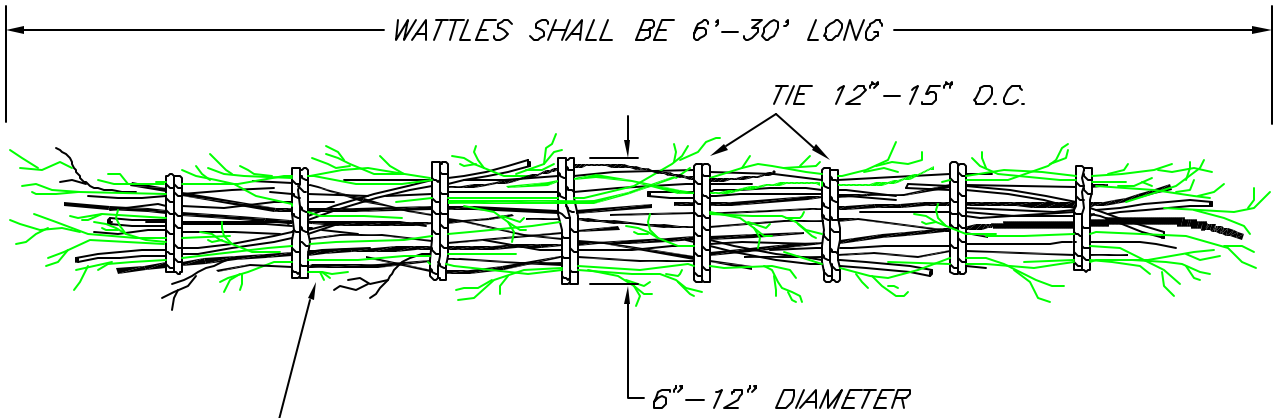

PREPARE WATTLES WITH 1/4"–1 1/2" CUTTINGS, WITH ALTERNATING BUTT–ENDS AND TIED SECURELY WITH TWINE OR ROPE.

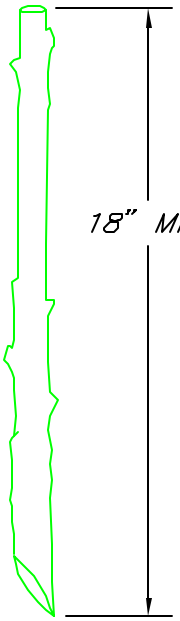

TYPICAL LIVE STAKE

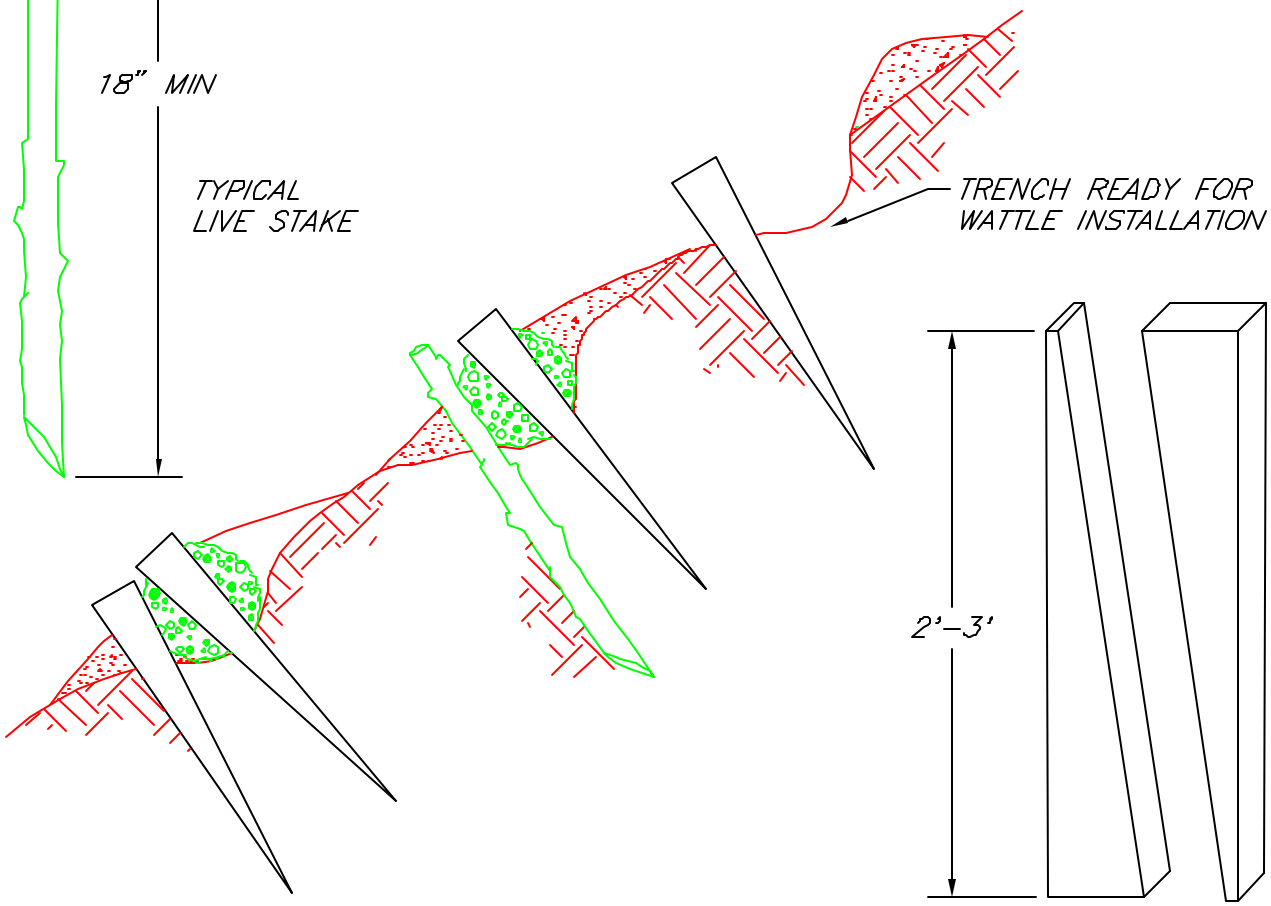

TYPICAL CONSTRUCTION STAKE SAW 2X4 LUMBER ON DIAGONAL

NOTES:
1. HARVEST AND INSTALL WATTLES DURING DORMANT SEASON.
2. INSTALL WATTLES ON SLOPE CONTOURS.
3. ALL WORK PROCEEDS FROM THE BOTTOM OF THE SLOPE TO THE TOP.
4. FILL OR PARTIALLY COVER WATTLE WITH SOIL FROM SLOPE OR TRENCH ABOVE.
5. COMPACT AND WORK SOIL INTO COMPLETED WATTLES.

NOT TO SCALE

SOURCE: SALIX APPLIED EARTHCARE – EROSION DRAW 5.0

WATTLE (LIVE FASCINE)