KPDES FORM 1

AI 4054

KENTUCKY POLLUTANT DISCHARGE ELIMINATION SYSTEM

RECEIVED APR 11 2007 By

PERMIT APPLICATION

This is an application to: (check one)

- ☐ Apply for a new permit.
- ☒ Apply for reissuance of expiring permit.
- ☐ Apply for a construction permit.
- ☐ Modify an existing permit.
  Give reason for modification under Item II.A.

A complete application consists of this form and one of the following:
Form A, Form B, Form C, Form F, or Short Form C

For additional information contact: MK 640
KPDES Branch (502) 564-3410

I. FACILITY LOCATION AND CONTACT INFORMATION	AGENCY USE	0	0	4	1	9	7	1

A. Name of business, municipality, company, etc. requesting permit
Louisville Gas & Electric Company

B. Facility Name and Location	C. Facility Owner/Mailing Address
Facility Location Name: Trimble County Generating Station	Owner Name: Louisville Gas & Electric Company Attention: Sharon L. Dodson
Facility Location Address (i.e. street, road, etc.): 487 Corn Creek Rd	Mailing Street: P.O Box 32010
Facility Location City, State, Zip Code: Bedford, KY 40006	Mailing City, State, Zip Code: Louisville, KY 40232-
	Telephone Number: 502-627-2997 (Roger Medina)

II. FACILITY DESCRIPTION

A. Provide a brief description of activities, products, etc: Fossil-fuel fired steam electric generating station

B. Standard Industrial Classification (SIC) Code and Description

Principal SIC Code & Description:	4911		
Other SIC Codes:			

III. FACILITY LOCATION

A. Attach a U.S. Geological Survey 7 ½ minute quadrangle map for the site. (See instructions)

B. County where facility is located: Trimble	City where facility is located (if applicable): Bedford
C. Body of water receiving discharge: Ohio River, Corn Creek, Barebone Creek	
D. Facility Site Latitude (degrees, minutes, seconds): 38 35' 04"	Facility Site Longitude (degrees, minutes, seconds): 85 24' 50"
E. Method used to obtain latitude & longitude (see instructions):	USGS Map
F. Facility Dun and Bradstreet Number (DUNS #) (if applicable):	00-694-5505

Revised June 1999

IV. OWNER/OPERATOR INFORMATION

A. Type of Ownership:
☐ Publicly Owned ☒ Privately Owned ☐ State Owned ☐ Both Public and Private Owned ☐ Federally owned

B. Operator Contact Information (See instructions)

Name of Treatment Plant Operator: Louisville Gas & Electric Co (W. Michael Winkler)	Telephone Number: 502-627-2338
Operator Mailing Address (Street): P.O. Box 32010	
Operator Mailing Address (City, State, Zip Code): Louisville, KY 40232	
Is the operator also the owner? Yes ☒ No ☐	Is the operator certified? If yes, list certification class and number below. Yes ☒ No ☐
Certification Class: Class I	Certification Number: 05799

V. EXISTING ENVIRONMENTAL PERMITS

Current NPDES Number: KY 0041971	Issue Date of Current Permit: 10/01/2002	Expiration Date of Current Permit: 09/30/2007
Number of Times Permit Reissued: 4	Date of Original Permit Issuance: 01/01/1979	Sludge Disposal Permit Number: NA
Kentucky DOW Operational Permit #: 08212003	Kentucky DSMRE Permit Number(s): NA	

C. Which of the following additional environmental permit/registration categories will also apply to this facility?

CATEGORY	EXISTING PERMIT WITH NO.	PERMIT NEEDED WITH PLANNED APPLICATION DATE
Air Emission Source	KY Division for Air Quality Title V Permit V-02-043	
Solid or Special Waste	KY Division for Waste Management Permit-By-Rule	
Hazardous Waste - Registration or Permit	KY Division for Waste Management Registration ID# KYD-991-277-096	

VI. DISCHARGE MONITORING REPORTS (DMRs)

KPDES permit holders are required to submit DMRs to the Division of Water on a regular schedule (as defined by the KPDES permit). The information in this section serves to specifically identify the department, office or individual you designate as responsible for submitting DMR forms to the Division of Water.

A. Name of department, office or official submitting DMRs:	John W. Moffett, Mgr, Sys.Lab & Environmental Compliance
B. Address where DMR forms are to be sent. (Complete only if address is different from mailing address in Section I.)	
DMR Mailing Name:	John W. Moffett
DMR Mailing Street:	US 42 P.O. Box 437
DMR Mailing City, State, Zip Code:	Ghent, KY 41045
DMR Official Telephone Number:	859-367-1263

VII. APPLICATION FILING FEE

KPDES regulations require that a permit applicant pay an application filing fee equal to twenty percent of the permit base fee. Please examine the base and filing fees listed below and in the Form 1 instructions and enclose a check payable to "Kentucky State Treasurer" for the appropriate amount. Descriptions of the base fee amounts are given in the "General Instructions."

Facility Fee Category:	Filing Fee Enclosed:
Major Industry	$ 640.00

VIII. CERTIFICATION

I certify under penalty of law that this document and all attachments were prepared under my direction or supervision in accordance with a system designed to assure that qualified personnel properly gather and evaluate the information submitted. Based on my inquiry of the person or persons who manage the system, or those persons directly responsible for gathering the information, the information submitted is, to the best of my knowledge and belief, true, accurate, and complete. I am aware that there are significant penalties for submitting false information, including the possibility of fine and imprisonment for knowing violations.

NAME AND OFFICIAL TITLE (type or print):	TELEPHONE NUMBER (area code and number):
John N. Voyles, Vice President Regulated Generation	502-627-4762
SIGNATURE	DATE: 4/9/07

KPDES FORM C

KENTUCKY POLLUTANT DISCHARGE ELIMINATION SYSTEM

PERMIT APPLICATION

A complete application consists of this form and Form 1.
For additional information, contact KPDES Branch, (502) 564-3410.

Name of Facility: Trimble County Generating Station	County: Trimble							
I. OUTFALL LOCATION	AGENCY USE							

For each outfall list the latitude and longitude of its location to the nearest 15 seconds and the name of the receiving water.

Outfall No. (list)	LATITUDE			LONGITUDE			RECEIVING WATER (name)
	Degrees	Minutes	Seconds	Degrees	Minutes	Seconds	
001	38	34	49	85	24	54	Ohio River
002	38	34	38	85	24	53	Ohio River
003	38	35	10	85	24	38	Internal (to Ash Basin)

II. FLOWS, SOURCES OF POLLUTION, AND TREATMENT TECHNOLOGIES

A. Attach a line drawing showing the water flow through the facility. Indicate sources of intake water, operations contributing wastewater to the effluent, and treatment units labeled to correspond to the more detailed descriptions in Item B. Construct a water balance on the line drawing by showing average flows between intakes, operations, treatment units, and outfall. If a water balance cannot be determined (e.g., for certain mining activities), provide a pictorial description of the nature and amount of any sources of water and any collection or treatment measures.

B. For each outfall, provide a description of: (1) all operations contributing wastewater to the effluent, including process wastewater, sanitary wastewater, cooling water, and storm water runoff; (2) the average flow contributed by each operation; and (3) the treatment received by the wastewater. Continue on additional sheets if necessary.

OUTFALL NO. (list)	OPERATION(S) CONTRIBUTING FLOW		TREATMENT	
	Operation (list)	Avg/Design Flow (include units)	Description	List Codes from Table C-1
001 Combined Flows	Plant Stormwater Runoff to	0.2666 MGD		1-U, 4-A
	Sedimentation Pond and Gas Comb.		See	
	Turbines Evap. Coolers Blowdown		Continuation	
002 Combined Flows	Cooling Tower Blowdown	8.5999 MGD	Sheet	4-A
	FGD/Gypsum Basin Blowdown, Water Treatment-Demineralizer Wastes			1-U, 1-O, 2-K
	Precipitation			
003	Package Sewage Treatment Plant	0.043 MGD		2-F, 3-A, 5-A
	(004 – Internal to Ash Pond)			

For each outfall list the latitude and longitude of its location to the nearest 15 seconds and the name of the receiving water.

Outfall No. (list)	LATITUDE			LONGITUDE			RECEIVING WATER (name)
	Degrees	Minutes	Seconds	Degrees	Minutes	Seconds	
004	38	36	00	85	25	00	Internal (to Ash Basin)
005	38	35	15	85	25	21	Plant Intake Water(Ohio River)
006	38	36	12	85	25	22	Corn Creek
007	38	34	52	85	24	24	Barebone Creek
008	38	35	85	85	25	06	Ohio River
009	38	34	85	85	24	54	Ohio River

OUTFALL NO. (list)	OPERATION(S) CONTRIBUTING FLOW		TREATMENT	
	Operation (list)	Avg/Design Flow (include units)	Description	List Codes from Table C-1
004	Chemical Metal Cleaning Water	0.01 MGD	Chemical Precipitation	2-C,
	(Internal to Ash Basin)		Neutralization	2-K
005	Plant Intake Water	21.2788 MGD		1-T
006	Stormwater Runoff (Non-Contaminated)	1.1753 MGD	Discharge to Surface Water	4-A
007	Stormwater Runoff (Non-Contaminated)	0.0126 MGD	Discharge to Surface Water	4-A
008	Stormwater Runoff (Non-Contaminated)	0.0309 MGD	Settling	1-U,
			Discharge to Surface Water	4-A
009	Stormwater Runoff (Non-Contaminated)	0.009 MGD	Discharge to Surface Water	4-A

II. FLOWS, SOURCES OF POLLUTION, AND TREATMENT TECHNOLOGIES (Continued)

C. Except for storm water runoff, leaks, or spills, are any of the discharges described in Items II-A or B intermittent or seasonal?

☐ Yes (Complete the following table.) ☒ No (Go to Section III.)

OUTFALL NUMBER (list)	OPERATIONS CONTRIBUTING FLOW (list)	FREQUENCY		FLOW				
		Days Per Week (specify average)	Months Per Year (specify average)	Flow Rate (in mgd)		Total volume (specify with units)		Duration (in days)
				Long-Term Average	Maximum Daily	Long-Term Average	Maximum Daily	

III. MAXIMUM PRODUCTION

A. Does an effluent guideline limitation promulgated by EPA under Section 304 of the Clean Water Act apply to your facility?

☒ Yes (Complete Item III-B) List effluent guideline category: 40 CFR Part 423

☐ No (Go to Section IV)

B. Are the limitations in the applicable effluent guideline expressed in terms of production (or other measures of operation)?

☐ Yes (Complete Item III-C) ☒ No (Go to Section IV)

C. If you answered "Yes" to Item III-B, list the quantity which represents the actual measurement of your maximum level of production, expressed in the terms and units used in the applicable effluent guideline, and indicate the affected outfalls.

MAXIMUM QUANTITY			Affected Outfalls (list outfall numbers)
Quantity Per Day	Units of Measure	Operation, Product, Material, Etc. (specify)	

IV. IMPROVEMENTS

A. Are you now required by any federal, state or local authority to meet any implementation schedule for the construction, upgrading, or operation of wastewater equipment or practices or any other environmental programs which may affect the discharges described in this application? This includes, but is not limited to, permit conditions, administrative or enforcement orders, enforcement compliance schedule letters, stipulations, court orders and grant or loan conditions.

☐ Yes (Complete the following table) ☒ No (Go to Item IV-B)

IDENTIFICATION OF CONDITION AGREEMENT, ETC.	AFFECTED OUTFALLS		BRIEF DESCRIPTION OF PROJECT	FINAL COMPLIANCE DATE	
	No.	Source of Discharge		Required	Projected

B. OPTIONAL: You may attach additional sheets describing any additional water pollution control programs (or other environmental projects which may affect your discharges) you now have under way or which you plan. Indicate whether each program is now under way or planned, and indicate your actual or planned schedules for construction.

V. INTAKE AND EFFLUENT CHARACTERISTICS

A, B, & C: See instructions before proceeding – Complete one set of tables for each outfall – Annotate the outfall number in the space provided.
NOTE: Tables V-A, V-B, and V-C are included on separate sheets numbered 5-18.

D. Use the space below to list any of the pollutants (refer to SARA Title III, Section 313) listed in Table C-3 of the instructions, which you know or have reason to believe is discharged or may be discharged from any outfall. For every pollutant you list, briefly describe the reasons you believe it to be present and report any analytical data in your possession.

POLLUTANT	SOURCE	POLLUTANT	SOURCE
Ammonia & Ammonium Hydroxide, Sodium Phosphate (dibasic & tribasic)	Boiler/Feedwater System pH Control & Buffering	Aluminum Sulfate	Boiler Water Treatment
Sodium Hydroxide & Sulfuric Acid	Demineralizer Regenerant Chemicals	Sodium Hypochlorite	Cooling Tower Treatment
Adipic Acid	Flue Gas Desulfurization Additive	Sodium BiSulfite	Intake and Cooling Tower Dechlorination-Treatment
		Calcium Hypochlorite (tablets)	Sewage Treatment Disinfectant

VI. POTENTIAL DISCHARGES NOT COVERED BY ANALYSIS

A. Is any pollutant listed in Item V-C a substance or a component of a substance which you use or produce, or expect to use or produce over the next 5 years as an immediate or final product or byproduct?

☐ Yes (List all such pollutants below) ☒ No (Go to Item VI-B)

B. Are your operations such that your raw materials, processes, or products can reasonably be expected to vary so that your discharge of pollutants may during the next 5 years exceed two times the maximum values reported in Item V?

☐ Yes (Complete Item VI-C) ☒ No (Go to Item VII)

C. If you answered "Yes" to Item VI-B, explain below and describe in detail to the best of your ability at this time the sources and expected levels of such pollutants which you anticipate will be discharged from each outfall over the next 5 years. Continue on additional sheets if you need more space.

VII. BIOLOGICAL TOXICITY TESTING DATA

Do you have any knowledge of or reason to believe that any biological test for acute or chronic toxicity has been made on any of your discharges or on a receiving water in relation to your discharge within the last 3 years?

☐ Yes (Identify the test(s) and describe their purposes below) ☒ No (Go to Section VIII)

The current 2002-2007 KPDES permit has no requirements to conduct Toxicity Control & Biomonitoring Program Testing

VIII. CONTRACT ANALYSIS INFORMATION

Were any of the analyses reported in Item V performed by a contract laboratory or consulting firm?

☒ Yes (list the name, address, and telephone number of, and pollutants analyzed by each such laboratory or firm below) ☐ No (Go to Section IX)

NAME	ADDRESS	TELEPHONE (Area code & number)	POLLUTANTS ANALYZED (list)
Microbac-EnviroData Group Laboratory	2520 Regency Road Lexington, KY 40503	859-276-3506	Biomonitoring and chemical composition analyses

IX. CERTIFICATION

I certify under penalty of law that this document and all attachments were prepared under my direction or supervision in accordance with a system designed to assure that qualified personnel properly gather and evaluate the information submitted. Based on my inquiry of the person or persons who manage the system, or those persons directly responsible for gathering the information, the information submitted is, to the best of my knowledge and belief, true, accurate, and complete. I am aware that there are significant penalties for submitting false information, including the possibility of fine and imprisonment for knowing violations.

NAME AND OFFICIAL TITLE (type or print):	TELEPHONE NUMBER (area code and number):
John N. Voyles, Vice President Regulated Generation	502-627-4762
SIGNATURE John N. Voyles	DATE 4/9/07

PLEASE PRINT OR TYPE IN THE UNSHADED AREAS ONLY. You may report some or all of this information on separate sheets (use the same format) instead of completing these pages. (See instructions)

Trimble County – Plant Stormwater Runoff to Sedimentation Basin

V. INTAKE AND EFFLUENT CHARACTERISTICS (Continued from page 3 of Form C) **OUTFALL NO. 001**

Part A – You must provide the results of at least one analysis for every pollutant in this table. Complete one table for each outfall. See instructions for additional details.

1. POLLUTANT	2. EFFLUENT a. Maximum Daily Value (1) Concentration	a. Maximum Daily Value (2) Mass	b. Maximum 30-Day Value (if available) (1) Concentration	b. Maximum 30-Day Value (if available) (2) Mass	c. Long-Term Avg. Value (if available) (1) Concentration	c. Long-Term Avg. Value (if available) (2) Mass	d. No. of Analyses	3. UNITS (specify if blank) a. Concentration	3. UNITS b. Mass	4. INTAKE (005) (optional) a. Long-Term Avg. Value (1) Concentration	a. Long-Term Avg. Value (2) Mass	b. No of Analyses
a. Biochemical Oxygen Demand (BOD)	BDL						1	mg/L		BDL		1
b. Chemical Oxygen Demand (COD)	BDL						1	mg/L		BDL		1
c. Total Organic Carbon (TOC)	3.1						1	mg/L		2.4		1
d. Total Suspended Solids (TSS)	10				6.0		5	mg/L		37		1
e. Ammonia (as N)	0.32				0.32		1	mg/L		BDL		1
f. Flow (in units of MGD)	VALUE	6.47	VALUE		VALUE	5.86	5		MGD	VALUE	10.04	366
g. Temperature (winter)	VALUE	3	VALUE		VALUE	3	1		°c	VALUE		
h. Temperature (summer)			VALUE		VALUE				°c	VALUE	18.69	366
i. pH	MINIMUM 7.58	MAXIMUM 8.28	MINIMUM	MAXIMUM			5	STANDARD UNITS				

Part B - In the MARK "X" column, place an "X" in the Believed Present column for each pollutant you know or have reason to believe is present. Place an "X" in the Believed Absent column for each pollutant you believe to be absent. If you mark the Believed Present column for any pollutant, you must provide the results of at least one analysis for that pollutant. Complete one table for each outfall. See the instructions for additional details and requirements.

1. POLLUTANT AND CAS NO. (if available)	2. MARK "X"		3. EFFLUENT							4. UNITS		6. INTAKE (optional)		
	a. Believed Present	b. Believed Absent	a. Maximum Daily Value		b. Maximum 30-Day Value (if available)		c. Long-Term Avg. Value (if available)		d. No. of Analyses	a. Concentration	b. Mass	a. Long-Term Avg Value		b. No. of Analyses
			(1) Concentration	(2) Mass	(1) Concentration	(2) Mass	(1) Concentration	(2) Mass				(1) Concentration	(2) Mass	
a. Bromide (24959-67-9)	X		BDL						1	mg/L		BDL		1
b. Bromine Total Residual	*		*						*	mg/L		*		*
c. Chloride	X		27						1	mg/L		14		1
d. Chlorine, Total Residual	X		BDL						1	mg/L		BDL		1
e. Color	X		14						1	ADMI		12		1
f. Fecal Coliform	X		BDL						1	C/100 ml		20		1
g. Fluoride (16984-48-8)	X		BDL						1	mg/L		BDL		1
h. Hardness (as $CaCO_3$)	X		530				355		5	mg/L		140		44
i. Nitrate – Nitrite (as N)	X		0.65						1	mg/L		1.375		1
j. Nitrogen, Total Organic (as N)	X		1.8						1	mg/L		0.92		1
k. Oil and Grease	X		BDL				BDL		5	mg/L		BDL		1
l. Phosphorous (as P), Total 7723-14-0	X		0.065						1	mg/L		0.11		1
m. Radioactivity														
(1) Alpha, Total		X								mg/L				
(2) Beta, Total		X								mg/L				
(3) Radium Total		X								mg/L				
(4) Radium, 226, Total		X								mg/L				

* Total Residual Chlorine analysis reflects all oxidants present (per KPDES permit), no standard Total Residual Bromine analysis method currently exists

Part B – Continued

1. POLLUTANT And CAS NO. (if available)	2. MARK "X"		3. EFFLUENT							4. UNITS		5. INTAKE (optional)		
	a. Believed Present	b. Believed Absent	a. Maximum Daily Value		b. Maximum 30-Day Value (if available)		c. Long-Term Avg. Value (if available)		d. No. of Analyses	a. Concentration	b. Mass	a. Long-Term Avg. Value		b. No. of Analyses
			(1) Concentration	(2) Mass	(1) Concentration	(2) Mass	(1) Concentration	(2) Mass				(1) Concentration	(2) Mass	
n. Sulfate (as SO_4) (14808-79-8)	X		140						1	mg/L		46		1
o. Sulfide (as S)	X		BDL						1	mg/L		BDL		1
p. Sulfite (as SO_4) (14286-46-3)	X		BDL						1	mg/L		BDL		1
q. Surfactants	X		BDL						1	mg/L		BDL		1
r. Aluminum, Total (7429-90)	X		BDL						1	mg/L		1.5		1
s. Barium, Total (7440-39-3)	X		0.022						1	mg/L		0.044		1
t. Boron, Total (7440-42-8)	X		1.7						1	mg/L		BDL		1
u. Cobalt, Total (7440-48-4)	X		BDL						1	mg/L		BDL		1
v. Iron, Total (7439-89-6)	X		0.345						1	mg/L		2.06		1
w. Magnesium Total (7439-96-4)	X		19.1						1	mg/L		11.1		1
x. Molybdenum Total (7439-98-7)	X		BDL						1	mg/L		BDL		1
y. Manganese, Total (7439-96-6)	X		0.06						1	mg/L		0.14		1
z. Tin, Total (7440-31-5)	X		BDL						1	mg/L		BDL		1
aa. Titanium, Total (7440-32-6)	X		BDL						1	mg/L		0.018		1

Part C – If you are a primary industry and this outfall contains process wastewater, refer to Table C-2 in the instructions to determine which of the GC/MS fractions you must test for. Mark "X" in the **Testing Required** column for all such GC/MS fractions that apply to your industry and for ALL toxic metals, cyanides, and total phenols. If you are not required to mark this column (secondary industries, nonprocess wastewater outfalls, and non-required GC/MS fractions), mark "X" in the **Believed Present** column for each pollutant you know or have reason to believe is present. Mark "X: in the **Believed Absent** column for each pollutant you believe to be absent. If you mark either the **Testing Required** or **Believed Present** columns for any pollutant, you must provide the result of at least one analysis for that pollutant. Note that there are seven pages to this part; please review each carefully. Complete one table (all seven pages) for each outfall. See instructions for additional details and requirements.

1. POLLUTANT And CAS NO. (if available)	2. MARK "X"			3. EFFLUENT							4. UNITS		5. INTAKE (optional)		
	a. Testing Required	a. Believed Present	b. Believed Absent	a. Maximum Daily Value		b. Maximum 30-Day Value (if available)		c. Long-Term Avg. Value (if available)		d. No. of Analyses	a. Concentration	b. Mass	a. Long-Term Avg Value		b. No. of Analyses
				(1) Concentration	(2) Mass	(1) Concentration	(2) Mass	(1) Concentration	(2) Mass				(1) Concentration	(2) Mass	
METALS, CYANIDE AND TOTAL PHENOLS															
1M. Antimony Total (7440-36-0)	X			BDL				BDL		5	mg/L		0.044		1
2M. Arsenic, Total (7440-38-2)	X			0.002				0.002		5	mg/L		BDL		1
3M. Beryllium Total (7440-41-7)	X			BDL				BDL		5	mg/L		BDL		1
4M. Cadmium Total (7440-43-9)	X			BDL				BDL		5	mg/L		BDL		1
5M. Chromium Total (7440-43-9)	X			0.006				0.006		5	mg/L		0.05		1
6M. Copper Total (7550-50-8)	X			0.002				0.002		5	mg/L		BDL		1
7M. Lead Total (7439-92-1)	X			BDL				BDL		5	mg/L		BDL		1
8M. Mercury Total (7439-97-6)	X			0.000022				0.000022		5	mg/L		0.000008		1
9M. Nickel, Total (7440-02-0)	X			0.02				0.012		5	mg/L		0.0021		1
10M. Selenium, Total (7782-49-2)	X			0.008				0.0021		5	mg/L		BDL		1
11M. Silver, Total (7440-28-0)	X			BDL				BDL		5	mg/L		BDL		1

Part C – Continued

1. POLLUTANT And CAS NO. (if available)	2. MARK "X"			3. EFFLUENT							4. UNITS		5. INTAKE (optional)		
	a. Testing Required	a. Believed Present	b. Believed Absent	a. Maximum Daily Value		b. Maximum 30-Day Value (if available)		c. Long-Term Avg. Value (if available)		d. No. of Analyses	a. Concentration	b. Mass	a. Long-Term Avg Value		b. No. of Analyses
				(1) Concentration	(2) Mass	(1) Concentration	(2) Mass	(1) Concentration	(2) Mass				(1) Concentration	(2) Mass	
METALS, CYANIDE AND TOTAL PHENOLS (Continued)															
12M. Thallium, Total (7440-28-0)	X			0.012				0.0019		5	mg/L		BDL		1
13M. Zinc, Total (7440-66-6)	X			0.031				0.0286		5	mg/L		0.014		1
14M. Cyanide, Total (57-12-5)	X			BDL						1	mg/L		BDL		1
15M. Phenols, Total	X			BDL						1	mg/L		BDL		1
DIOXIN															
2,3,7,8 Tetra-chlorodibenzo, P, Dioxin (1784-01-6)			X	DESCRIBE RESULTS:											
GC/MS FRACTION – VOLATILE COMPOUNDS															
1V. Acrolein (107-02-8)	X			BDL						1	mg/L		BDL		1
2V. Acrylonitrile (107-13-1)	X			BDL						1	mg/L		BDL		1
3V. Benzene (71-43-2)	X			BDL						1	mg/L		BDL		1
5V. Bromoform (75-25-2)	X			BDL						1	mg/L		BDL		1
6V. Carbon Tetrachloride (56-23-5)	X			BDL						1	mg/L		BDL		1
7V. Chloro-benzene (108-90-7)	X			BDL						1	mg/L		BDL		1
8V. Chlorodibro-momethane (124-48-1)	X			BDL						1	mg/L		BDL		1

Part C – Continued															
1. POLLUTANT And CAS NO. (if available)	2. MARK "X"			3. EFFLUENT							4. UNITS		5. INTAKE (optional)		
	a. Testing Required	a. Believed Present	b. Believed Absent	a. Maximum Daily Value		b. Maximum 30-Day Value (if available)		c. Long-Term Avg. Value (if available)		d. No. of Analyses	a. Concentration	b. Mass	a. Long-Term Avg Value		b. No. of Analyses
				(1) Concentration	(2) Mass	(1) Concentration	(2) Mass	(1) Concentration	(2) Mass				(1) Concentration	(2) Mass	
9V. Chloroethane (74-00-3)	X			BDL						1	mg/L		BDL		1
10V. 2-Chloro-ethylvinyl Ether (110-75-8)	X			BDL						1	mg/L		BDL		1
11V. Chloroform (67-66-3)	X			BDL						1	mg/L		BDL		1
12V. Dichloro-bromomethane (75-71-8)	X			BDL						1	mg/L		BDL		1
14V. 1,1-Dichloroethane (75-34-3)	X			BDL						1	mg/L		BDL		1
15V. 1,2-Dichloroethane (107-06-2)	X			BDL						1	mg/L		BDL		1
16V. 1,1-Dichlorethylene (75-35-4)	X			BDL						1	mg/L		BDL		1
17V. 1,2-Di-chloropropane (78-87-5)	X			BDL						1	mg/L		BDL		1
18V. 1,3-Dichloropro-pylene (452-75-6)	X			BDL						1	mg/L		BDL		1
19V. Ethyl-benzene (100-41-4)	X			BDL						1	mg/L		BDL		1
20V. Methyl Bromide (74-83-9)	X			BDL						1	mg/L		BDL		1

Part C – Continued															
1. POLLUTANT And CAS NO. (if available)	2. MARK "X"			3. EFFLUENT							4. UNITS		5. INTAKE (optional)		
	a. Testing Required	a. Believed Present	b. Believed Absent	a. Maximum Daily Value		b. Maximum 30-Day Value (if available)		c. Long-Term Avg. Value (if available)		d. No. of Analyses	a. Concentration	b. Mass	a. Long-Term Avg. Value		b. No. of Analyses
				(1) Concentration	(2) Mass	(1) Concentration	(2) Mass	(1) Concentration	(2) Mass				(1) Concentration	(2) Mass	
21V. Methyl Chloride (74-87-3)	X			BDL						1	mg/L		BDL		1
22V. Methylene Chloride (75-00-2)	X			BDL						1	mg/L		BDL		1
23V. 1,1,2,2-Tetrachloro-ethane (79-34-5)	X			BDL						1	mg/L		BDL		1
24V. Tetrachloro-ethylene (127-18-4)	X			BDL						1	mg/L		BDL		1
25V. Toluene (108-88-3)	X			BDL						1	mg/L		BDL		1
26V. 1,2-Trans-Dichloro-ethylene (156-60-5)	X			BDL						1	mg/L		BDL		1
27V. 1,1,1-Tri-chloroethane (71-55-6)	X			BDL						1	mg/L		BDL		1
28V. 1,1,2-Tri-chloroethane (79-00-5)	X			BDL						1	mg/L		BDL		1
29V. Trichloro-ethylene (79-01-6)	X			BDL						1	mg/L		BDL		1
30V. Vinyl Chloride (75-01-4)	X			BDL						1	mg/L		BDL		1

Part C – Continued

1. POLLUTANT And CAS NO. (if available)	2. MARK "X"			3. EFFLUENT							4. UNITS		5. INTAKE (optional)		
	a. Testing Required	a. Believed Present	b. Believed Absent	a. Maximum Daily Value		b. Maximum 30-Day Value (if available)		c. Long-Term Avg. Value (if available)		d. No. of Analyses	a. Concentration	b. Mass	a. Long-Term Avg Value		b. No. of Analyses
				(1) Concentration	(2) Mass	(1) Concentration	(2) Mass	(1) Concentration	(2) Mass				(1) Concentration	(2) Mass	
GC/MS FRACTION – ACID COMPOUNDS															
1A. 2-Chloro-phenol (95-57-8)	X			BDL						1	mg/L		BDL		1
2A. 2,4-Dichlor-Orophenol (120-83-2)	X			BDL						1	mg/L		BDL		1
3A. 2,4-Dimeth-ylphenol (105-67-9)	X			BDL						1	mg/L		BDL		1
4A. 4,6-Dinitro-o-cresol (534-52-1)	X			BDL						1	mg/L		BDL		1
5A. 2,4-Dinitro-phenol (51-28-5)	X			BDL						1	mg/L		BDL		1
6A. 2-Nitro-phenol (88-75-5)	X			BDL						1	mg/L		BDL		1
7A. 4-Nitro-phenol (100-02-7)	X			BDL						1	mg/L		BDL		1
8A. P-chloro-m-cresol (59-50-7)	X			BDL						1	mg/L		BDL		1
9A. Pentachloro-phenol (87-88-5)	X			BDL						1	mg/L		BDL		1
10A. Phenol (108-05-2)	X			BDL						1	mg/L		BDL		1
11A. 2,4,6-Tri-chlorophenol (88-06-2)	X			BDL						1	mg/L		BDL		1
GC/MS FRACTION – BASE/NEUTRAL COMPOUNDS															
1B. Acena-phthene (83-32-9)	X			BDL						1	mg/L		BDL		1

Part C – Continued															
1. POLLUTANT And CAS NO. (if available)	2. MARK "X"			3. EFFLUENT							4. UNITS		5. INTAKE (optional)		
	a. Testing Required	a. Believed Present	b. Believed Absent	a. Maximum Daily Value		b. Maximum 30-Day Value (if available)		c. Long-Term Avg. Value (if available)		d. No. of Analyses	a. Concentration	b. Mass	a. Long-Term Avg Value		b. No. of Analyses
				(1) Concentration	(2) Mass	(1) Concentration	(2) Mass	(1) Concentration	(2) Mass				(1) Concentration	(2) Mass	
GC/MS FRACTION – BASE/NEUTRAL COMPOUNDS (Continued)															
2B. Acenaphtylene (208-96-8)	X			BDL						1	mg/L		BDL		1
3B. Anthracene (120-12-7)	X			BDL						1	mg/L		BDL		1
4B. Benzidine (92-87-5)	X			BDL						1	mg/L		BDL		1
5B. Benzo(a)-anthracene (56-55-3)	X			BDL						1	mg/L		BDL		1
6B. Benzo(a)-pyrene (50-32-8)	X			BDL						1	mg/L		BDL		1
7B. 3,4-Benzo-fluoranthene (205-99-2)	X			BDL						1	mg/L		BDL		1
8B. Benzo(ghl) perylene (191-24-2)	X			BDL						1	mg/L		BDL		1
9B. Benzo(k)-fluoranthene (207-08-9)	X			BDL						1	mg/L		BDL		1
10B. Bis(2-chlor-oethoxy)-methane (111-91-1)	X			BDL						1	mg/L		BDL		1
11B. Bis (2-chlor-oisopropyl)-Ether	X			BDL						1	mg/L		BDL		1
12B. Bis (2-ethyl-hexyl)-phthalate (117-81-7)	X			BDL						1	mg/L		BDL		1

Part C – Continued															
1. POLLUTANT And CAS NO. (if available)	2. MARK "X"			3. EFFLUENT							4. UNITS		5. INTAKE (optional)		
	a. Testing Required	a. Believed Present	b. Believed Absent	a. Maximum Daily Value		b. Maximum 30-Day Value (if available)		c. Long-Term Avg. Value (if available)		d. No. of Analyses	a. Concentration	b. Mass	a. Long-Term Avg Value		b. No. of Analyses
				(1) Concentration	(2) Mass	(1) Concentration	(2) Mass	(1) Concentration	(2) Mass				(1) Concentration	(2) Mass	
GC/MS FRACTION – BASE/NEUTRAL COMPOUNDS (Continued)															
13B. 4-Bromo-phenyl Phenyl ether (101-55-3)	X			BDL						1	mg/L		BDL		1
14B. Butyl-benzyl phthalate (85-68-7)	X			BDL						1	mg/L		BDL		1
15B. 2-Chloro-naphthalene (7005-72-3)	X			BDL						1	mg/L		BDL		1
16B. 4-Chloro-phenyl phenyl ether (7005-72-3)	X			BDL						1	mg/L		BDL		1
17B. Chrysene (218-01-9)	X			BDL						1	mg/L		BDL		1
18B. Dibenzo-(a,h) Anthracene (53-70-3)	X			BDL						1	mg/L		BDL		1
19B. 1,2-Dichloro-benzene (95-50-1)	X			BDL						1	mg/L		BDL		1
20B. 1,3-Dichloro-Benzene (541-73-1)	X			BDL						1	mg/L		BDL		1
21B. 1,4-Dichloro-benzene (106-46-7)	X			BDL						1	mg/L		BDL		1
22B. 3,3-Dichloro-benzidene (91-94-1)	X			BDL						1	mg/L		BDL		1
23B. Diethyl Phthalate (84-66-2)	X			BDL						1	mg/L		BDL		1

Part C – Continued															
1. POLLUTANT And CAS NO. (if available)	2. MARK "X"			3. EFFLUENT							4. UNITS		5. INTAKE (optional)		
	a. Testing Required	a. Believed Present	b. Believed Absent	a. Maximum Daily Value		b. Maximum 30-Day Value (if available)		c. Long-Term Avg. Value (if available)		d. No. of Analyses	a. Concentration	b. Mass	a. Long-Term Avg. Value		b. No. of Analyses
				(1) Concentration	(2) Mass	(1) Concentration	(2) Mass	(1) Concentration	(2) Mass				(1) Concentration	(2) Mass	
GC/MS FRACTION – BASE/NEUTRAL COMPOUNDS (Continued)															
24B. Dimethyl Phthalate (131-11-3)	X			BDL						1	mg/L		BDL		1
25B. Di-N-butyl Phthalate (84-74-2)	X			BDL						1	mg/L		BDL		1
26B. 2,4-Dinitro-toluene (121-14-2)	X			BDL						1	mg/L		BDL		1
27B. 2,6-Dinitro-toluene (606-20-2)	X			BDL						1	mg/L		BDL		1
28B. Di-n-octyl Phthalate (117-84-0)	X			BDL						1	mg/L		BDL		1
29B. 1,2-diphenyl-hydrazine (as azonbenzene) (122-66-7)	X			BDL						1	mg/L		BDL		1
30B. Fluoranthene (208-44-0)	X			BDL						1	mg/L		BDL		1
31B. Fluorene (86-73-7)	X			BDL						1	mg/L		BDL		1
32B. Hexachloro-benzene (118-71-1)	X			BDL						1	mg/L		BDL		1
33B. Hexachloro-butadiene (87-68-3)	X			BDL						1	mg/L		BDL		1
34B. Hexachloro-cyclopenta-diene (77-47-4)	X			BDL						1	mg/L		BDL		1

Part C – Continued															
1. POLLUTANT And CAS NO. (if available)	2. MARK "X"			3. EFFLUENT							4. UNITS		5. INTAKE (optional)		
	a. Testing Required	a. Believed Present	b. Believed Absent	a. Maximum Daily Value		b. Maximum 30-Day Value (if available)		c. Long-Term Avg. Value (if available)		d. No. of Analyses	a. Concentration	b. Mass	a. Long-Term Avg Value		b. No. of Analyses
				(1) Concentration	(2) Mass	(1) Concentration	(2) Mass	(1) Concentration	(2) Mass				(1) Concentration	(2) Mass	
GC/MS FRACTION – BASE/NEUTRAL COMPOUNDS (Continued)															
35B. Hexachlo-roethane (67-72-1)	X			BDL						1	mg/L		BDL		1
36B. Indneo-(1,2,3-oc)-Pyrene (193-39-5)	X			BDL						1	mg/L		BDL		1
37B. Isophorone (78-59-1)	X			BDL						1	mg/L		BDL		1
38B. Napthalene (91-20-3)	X			BDL						1	mg/L		BDL		1
39B. Nitro-benzene (98-95-3)	X			BDL						1	mg/L		BDL		1
40B. N-Nitroso-dimethyl-amine (62-75-9)	X			BDL						1	mg/L		BDL		1
41B. N-nitrosodi-n-propylamine (621-64-7)	X			BDL						1	mg/L		BDL		1
42B. N-nitro-sodiphenyl-amine (86-30-6)	X			BDL						1	mg/L		BDL		1
43B. Phenan-threne (85-01-8)	X			BDL						1	mg/L		BDL		1
44B. Pyrene (129-00-0)	X			BDL						1	mg/L		BDL		1
45B. 1,2,4 Tri-chloro-benzene (120-82-1)	X			BDL						1	mg/L		BDL		1

Part C – Continued															
1. POLLUTANT And CAS NO. (if available)	2. MARK "X"			3. EFFLUENT							4. UNITS		5. INTAKE (optional)		
	a. Testing Required	a. Believed Present	b. Believed Absent	a. Maximum Daily Value		b. Maximum 30-Day Value (if available)		c. Long-Term Avg. Value (if available)		d. No. of Analyses	a. Concentration	b. Mass	a. Long-Term Avg. Value		b. No. of Analyses
				(1) Concentration	(2) Mass	(1) Concentration	(2) Mass	(1) Concentration	(2) Mass				(1) Concentration	(2) Mass	
GC/MS FRACTION – PESTICIDES															
1P. Aldrin (309-00-2)			X												
2P. α-BHC (319-84-6)			X												
3P. β-BHC (58-89-9)			X												
4P. gamma-BHC (58-89-9)			X												
5P. δ-BHC (319-86-8)			X												
6P. Chlordane (57-74-9)			X												
7P. 4,4'-DDT (50-29-3)			X												
8P. 4,4'-DDE (72-55-9)			X												
9P. 4,4'-DDD (72-54-8)			X												
10P. Dieldrin (60-57-1)			X												
11P. α-Endosulfan (115-29-7)			X												
12P. β-Endosulfan (115-29-7)			X												
13P. Endosulfan Sulfate (1031-07-8)			X												
14P. Endrin (72-20-8)			X												

Part C – Continued															
1. POLLUTANT And CAS NO. (if available)	2. MARK "X"			3. EFFLUENT							4. UNITS		5. INTAKE (optional)		
	a. Testing Required	a. Believed Present	b. Believed Absent	a. Maximum Daily Value		b. Maximum 30-Day Value (if available)		c. Long-Term Avg. Value (if available)		d. No. of Analyses	a. Concentration	b. Mass	a. Long-Term Avg Value		b. No. of Analyses
				(1) Concentration	(2) Mass	(1) Concentration	(2) Mass	(1) Concentration	(2) Mass				(1) Concentration	(2) Mass	
GC/MS FRACTION – PESTICIDES															
15P. Endrin Aldehyde (7421-93-4)			X												
16P Heptachlor (76-44-8)			X												
17P. Heptaclor Epoxide (1024-57-3)			X												
18P. PCB-1242 (53469-21-9)			X												
19P. PCB-1254 (11097-69-1)			X												
20P. PCB-1221 (11104-28-2)			X												
21P. PCB-1232 (11141-16-5)			X												
22P. PCB-1248 (12672-29-6)			X												
23P. PCB-1260 (11096-82-5)			X												
24P. PCB-1016 (12674-11-2)			X												
25P. Toxaphene (8001-35-2)			X												

PLEASE PRINT OR TYPE IN THE UNSHADED AREAS ONLY. You may report some or all of this information on separate sheets (use the same format) instead of completing these pages. (See instructions)

Trimble County – Cooling Tower Blowdown

V. INTAKE AND EFFLUENT CHARACTERISTICS (Continued from page 3 of Form C) **OUTFALL NO. 002**

Part A – You must provide the results of at least one analysis for every pollutant in this table. Complete one table for each outfall. See instructions for additional details.

1. POLLUTANT	2. EFFLUENT							3. UNITS (specify if blank)		4. INTAKE (optional)		
	a. Maximum Daily Value		b. Maximum 30-Day Value (if available)		c. Long-Term Avg. Value (if available)		d. No. of Analyses	a. Concentration	b. Mass	a. Long-Term Avg. Value		b. No of Analyses
	(1) Concentration	(2) Mass	(1) Concentration	(2) Mass	(1) Concentration	(2) Mass				(1) Concentration	(2) Mass	
a. Biochemical Oxygen Demand (BOD)	2.0						1	mg/L				
b. Chemical Oxygen Demand (COD)	36						1	mg/L				
c. Total Organic Carbon (TOC)	7.8						1	mg/L				
d. Total Suspended Solids (TSS)	360						1	mg/L				
e. Ammonia (as N)	BDL						1	mg/L				
f. Flow (in units of MGD)	VALUE	1.77	VALUE		VALUE	1.39	365	MGD		VALUE		
g. Temperature (winter)	VALUE		VALUE		VALUE		365	°c		VALUE		
h. Temperature (summer)	VALUE	34.9	VALUE		VALUE	26.45	363	°c		VALUE		
i. pH	MINIMUM 8.51	MAXIMUM 8.74	MINIMUM	MAXIMUM			13	STANDARD UNITS				

Part B - In the MARK "X" column, place an "X" in the Believed Present column for each pollutant you know or have reason to believe is present. Place an "X" in the Believed Absent column for each pollutant you believe to be absent. If you mark the Believed Present column for any pollutant, you must provide the results of at least one analysis for that pollutant. Complete one table for each outfall. See the instructions for additional details and requirements.

1. POLLUTANT AND CAS NO. (if available)	2. MARK "X"		3. EFFLUENT							4. UNITS		6. INTAKE (optional)		
	a. Believed Present	b. Believed Absent	a. Maximum Daily Value		b. Maximum 30-Day Value (if available)		c. Long-Term Avg. Value (if available)		d. No. of Analyses	a. Concentration	b. Mass	a. Long-Term Avg Value		b. No. of Analyses
			(1) Concentration	(2) Mass	(1) Concentration	(2) Mass	(1) Concentration	(2) Mass				(1) Concentration	(2) Mass	
a. Bromide (24959-67-9)	X		BDL						1	mg/L				
b. Bromine Total Residual	X		*						*	mg/L				
c. Chloride	X		52						1	mg/L				
d. Chlorine, Total Residual	X		BDL						1	mg/L				
e. Color	X		31						1	ADMI				
f. Fecal Coliform	X		10						1	C/100 ml				
g. Fluoride (16984-48-8)	X		BDL						1	mg/L				
h. Hardness (as $CaCO_3$)	X		490						1	mg/L				
i. Nitrate – Nitrite (as N)	X		4.68						1	mg/L				
j. Nitrogen, Total Organic (as N)	X		3.2						1	mg/L				
k. Oil and Grease	X		BDL						1	mg/L				
l. Phosphorous (as P), Total 7723-14-0	X		1.8						1	mg/L				
m. Radioactivity														
(1) Alpha, Total		X								mg/L				
(2) Beta, Total		X								mg/L				
(3) Radium Total		X								mg/L				
(4) Radium, 226, Total		X								mg/L				

* Total Residual Chlorine analysis reflects all oxidants present (per KPDES permit), no standard Total Residual Bromine analysis method currently exists

Part B – Continued

1. POLLUTANT And CAS NO. (if available)	2. MARK "X"		3. EFFLUENT							4. UNITS		5. INTAKE (optional)		
	a. Believed Present	b. Believed Absent	a. Maximum Daily Value		b. Maximum 30-Day Value (if available)		c. Long-Term Avg. Value (if available)		d. No. of Analyses	a. Concentration	b. Mass	a. Long-Term Avg. Value		b. No. of Analyses
			(1) Concentration	(2) Mass	(1) Concentration	(2) Mass	(1) Concentration	(2) Mass				(1) Concentration	(2) Mass	
n. Sulfate (as SO_4) (14808-79-8)	X		240						1	mg/L				
o. Sulfide (as S)	X		BDL						1	mg/L				
p. Sulfite (as SO_4) (14286-46-3)	X		BDL						1	mg/L				
q. Surfactants	X		BDL						1	mg/L				
r. Aluminum, Total (7429-90)	X		12.4						1	mg/L				
s. Barium, Total (7440-39-3)	X		0.208						1	mg/L				
t. Boron, Total (7440-42-8)	X		BDL						1	mg/L				
u. Cobalt, Total (7440-48-4)	X		BDL						1	mg/L				
v. Iron, Total (7439-89-6)	X		16.5						1	mg/L				
w. Magnesium Total (7439-96-4)	X		37.7						1	mg/L				
x. Molybdenum Total (7439-98-7)	X		0.07						1	mg/L				
y. Manganese, Total (7439-96-6)	X		0.94						1	mg/L				
z. Tin, Total (7440-31-5)	X		BDL						1	mg/L				
aa. Titanium, Total (7440-32-6)	X		0.177						1	mg/L				

Part C – If you are a primary industry and this outfall contains process wastewater, refer to Table C-2 in the instructions to determine which of the GC/MS fractions you must test for. Mark "X" in the **Testing Required** column for all such GC/MS fractions that apply to your industry and for ALL toxic metals, cyanides, and total phenols. If you are not required to mark this column (secondary industries, nonprocess wastewater outfalls, and non-required GC/MS fractions), mark "X" in the **Believed Present** column for each pollutant you know or have reason to believe is present. Mark "X: in the **Believed Absent** column for each pollutant you believe to be absent. If you mark either the **Testing Required** or **Believed Present** columns for any pollutant, you must provide the result of at least one analysis for that pollutant. Note that there are seven pages to this part; please review each carefully. Complete one table (all seven pages) for each outfall. See instructions for additional details and requirements.

1. POLLUTANT And CAS NO. (if available)	2. MARK "X"			3. EFFLUENT							4. UNITS		5. INTAKE (optional)		
	a. Testing Required	a. Believed Present	b. Believed Absent	a. Maximum Daily Value		b. Maximum 30-Day Value (if available)		c. Long-Term Avg. Value (if available)		d. No. of Analyses	a. Concentration	b. Mass	a. Long-Term Avg Value		b. No. of Analyses
				(1) Concentration	(2) Mass	(1) Concentration	(2) Mass	(1) Concentration	(2) Mass				(1) Concentration	(2) Mass	
METALS, CYANIDE AND TOTAL PHENOLS															
1M. Antimony Total (7440-36-0)	X			BDL						1	mg/L				
2M. Arsenic, Total (7440-38-2)	X			BDL						1	mg/L				
3M. Beryllium Total (7440-41-7)	X			BDL						1	mg/L				
4M. Cadmium Total (7440-43-9)	X			BDL						1	mg/L				
5M. Chromium Total (7440-43-9)	X			0.059				0.031		2	mg/L				
6M. Copper Total (7550-50-8)	X			0.05						1	mg/L				
7M. Lead Total (7439-92-1)	X			0.017						1	mg/L				
8M. Mercury Total (7439-97-6)	X			0.000073						1	mg/L				
9M. Nickel, Total (7440-02-0)	X			0.049						1	mg/L				
10M. Selenium, Total (7782-49-2)	X			BDL						1	mg/L				
11M. Silver, Total (7440-28-0)	X			BDL						1	mg/L				

Part C – Continued

1. POLLUTANT And CAS NO. (if available)	2. MARK "X"			3. EFFLUENT							4. UNITS		5. INTAKE (optional)		
	a. Testing Required	a. Believed Present	b. Believed Absent	a. Maximum Daily Value		b. Maximum 30-Day Value (if available)		c. Long-Term Avg. Value (if available)		d. No. of Analyses	a. Concentration	b. Mass	a. Long-Term Avg Value		b. No. of Analyses
				(1) Concentration	(2) Mass	(1) Concentration	(2) Mass	(1) Concentration	(2) Mass				(1) Concentration	(2) Mass	
METALS, CYANIDE AND TOTAL PHENOLS (Continued)															
12M. Thallium, Total (7440-28-0)	X			BDL						1	mg/L				
13M. Zinc, Total (7440-66-6)	X			0.091				0.071		2	mg/L				
14M. Cyanide, Total (57-12-5)	X			BDL						1	mg/L				
15M. Phenols, Total	X			BDL						1	mg/L				
DIOXIN															
2,3,7,8 Tetra-chlorodibenzo, P, Dioxin (1784-01-6)			X	DESCRIBE RESULTS:											
GC/MS FRACTION – VOLATILE COMPOUNDS															
1V. Acrolein (107-02-8)	X			BDL						1	mg/L				
2V. Acrylonitrile (107-13-1)	X			BDL						1	mg/L				
3V. Benzene (71-43-2)	X			BDL						1	mg/L				
5V. Bromoform (75-25-2)	X			BDL						1	mg/L				
6V. Carbon Tetrachloride (56-23-5)	X			BDL						1	mg/L				
7V. Chloro-benzene (108-90-7)	X			BDL						1	mg/L				
8V. Chlorodibro-momethane (124-48-1)	X			BDL						1	mg/L				

Part C – Continued															
1. POLLUTANT And CAS NO. (if available)	2. MARK "X"			3. EFFLUENT							4. UNITS		5. INTAKE (optional)		
	a. Testing Required	a. Believed Present	b. Believed Absent	a. Maximum Daily Value		b. Maximum 30-Day Value (if available)		c. Long-Term Avg. Value (if available)		d. No. of Analyses	a. Concentration	b. Mass	a. Long-Term Avg Value		b. No. of Analyses
				(1) Concentration	(2) Mass	(1) Concentration	(2) Mass	(1) Concentration	(2) Mass				(1) Concentration	(2) Mass	
9V. Chloroethane (74-00-3)	X			BDL						1	mg/L				
10V. 2-Chloro-ethylvinyl Ether (110-75-8)	X			BDL						1	mg/L				
11V. Chloroform (67-66-3)	X			BDL						1	mg/L				
12V. Dichloro-bromomethane (75-71-8)	X			BDL						1	mg/L				
14V. 1,1-Dichloroethane (75-34-3)	X			BDL						1	mg/L				
15V. 1,2-Dichloroethane (107-06-2)	X			BDL						1	mg/L				
16V. 1,1-Dichlorethylene (75-35-4)	X			BDL						1	mg/L				
17V. 1,2-Di-chloropropane (78-87-5)	X			BDL						1	mg/L				
18V. 1,3-Dichloropro-pylene (452-75-6)	X			BDL						1	mg/L				
19V. Ethyl-benzene (100-41-4)	X			BDL						1	mg/L				
20V. Methyl Bromide (74-83-9)	X			BDL						1	mg/L				

Part C – Continued															
1. POLLUTANT And CAS NO. (if available)	2. MARK "X"			3. EFFLUENT							4. UNITS		5. INTAKE (optional)		
	a. Testing Required	a. Believed Present	b. Believed Absent	a. Maximum Daily Value		b. Maximum 30-Day Value (if available)		c. Long-Term Avg. Value (if available)		d. No. of Analyses	a. Concentration	b. Mass	a. Long-Term Avg. Value		b. No. of Analyses
				(1) Concentration	(2) Mass	(1) Concentration	(2) Mass	(1) Concentration	(2) Mass				(1) Concentration	(2) Mass	
21V. Methyl Chloride (74-87-3)	X			BDL						1	mg/L				
22V. Methylene Chloride (75-00-2)	X			BDL						1	mg/L				
23V. 1,1,2,2-Tetrachloro-ethane (79-34-5)	X			BDL						1	mg/L				
24V. Tetrachloro-ethylene (127-18-4)	X			BDL						1	mg/L				
25V. Toluene (108-88-3)	X			BDL						1	mg/L				
26V. 1,2-Trans-Dichloro-ethylene (156-60-5)	X			BDL						1	mg/L				
27V. 1,1,1-Tri-chloroethane (71-55-6)	X			BDL						1	mg/L				
28V. 1,1,2-Tri-chloroethane (79-00-5)	X			BDL						1	mg/L				
29V. Trichloro-ethylene (79-01-6)	X			BDL						1	mg/L				
30V. Vinyl Chloride (75-01-4)	X			BDL						1	mg/L				

Part C – Continued															
1. POLLUTANT And CAS NO. (if available)	2. MARK "X"			3. EFFLUENT							4. UNITS		5. INTAKE (optional)		
	a. Testing Required	a. Believed Present	b. Believed Absent	a. Maximum Daily Value		b. Maximum 30-Day Value (if available)		c. Long-Term Avg. Value (if available)		d. No. of Analyses	a. Concentration	b. Mass	a. Long-Term Avg Value		b. No. of Analyses
				(1) Concentration	(2) Mass	(1) Concentration	(2) Mass	(1) Concentration	(2) Mass				(1) Concentration	(2) Mass	
GC/MS FRACTION – ACID COMPOUNDS															
1A. 2-Chloro-phenol (95-57-8)	X			BDL						1	mg/L				
2A. 2,4-Dichlor-Orophenol (120-83-2)	X			BDL						1	mg/L				
3A. 2,4-Dimeth-ylphenol (105-67-9)	X			BDL						1	mg/L				
4A. 4,6-Dinitro-o-cresol (534-52-1)	X			BDL						1	mg/L				
5A. 2,4-Dinitro-phenol (51-28-5)	X			BDL						1	mg/L				
6A. 2-Nitro-phenol (88-75-5)	X			BDL						1	mg/L				
7A. 4-Nitro-phenol (100-02-7)	X			BDL						1	mg/L				
8A. P-chloro-m-cresol (59-50-7)	X			BDL						1	mg/L				
9A. Pentachloro-phenol (87-88-5)	X			BDL						1	mg/L				
10A. Phenol (108-05-2)	X			BDL						1	mg/L				
11A. 2,4,6-Tri-chlorophenol (88-06-2)	X			BDL						1	mg/L				
GC/MS FRACTION – BASE/NEUTRAL COMPOUNDS															
1B. Acena-phthene (83-32-9)	X			BDL						1	mg/L				

Part C – Continued															
1. POLLUTANT And CAS NO. (if available)	2. MARK "X"			3. EFFLUENT							4. UNITS		5. INTAKE (optional)		
	a. Testing Required	a. Believed Present	b. Believed Absent	a. Maximum Daily Value		b. Maximum 30-Day Value (if available)		c. Long-Term Avg. Value (if available)		d. No. of Analyses	a. Concentration	b. Mass	a. Long-Term Avg Value		b. No. of Analyses
				(1) Concentration	(2) Mass	(1) Concentration	(2) Mass	(1) Concentration	(2) Mass				(1) Concentration	(2) Mass	
GC/MS FRACTION – BASE/NEUTRAL COMPOUNDS (Continued)															
2B. Acenaphtylene (208-96-8)	X			BDL						1	mg/L				
3B. Anthracene (120-12-7)	X			BDL						1	mg/L				
4B. Benzidine (92-87-5)	X			BDL						1	mg/L				
5B. Benzo(a)-anthracene (56-55-3)	X			BDL						1	mg/L				
6B. Benzo(a)-pyrene (50-32-8)	X			BDL						1	mg/L				
7B. 3,4-Benzo-fluoranthene (205-99-2)	X			BDL						1	mg/L				
8B. Benzo(ghl) perylene (191-24-2)	X			BDL						1	mg/L				
9B. Benzo(k)-fluoranthene (207-08-9)	X			BDL						1	mg/L				
10B. Bis(2-chlor-oethoxy)-methane (111-91-1)	X			BDL						1	mg/L				
11B. Bis (2-chlor-oisopropyl)-Ether	X			BDL						1	mg/L				
12B. Bis (2-ethyl-hexyl)-phthalate (117-81-7)	X			BDL						1	mg/L				

Part C – Continued															
1. POLLUTANT And CAS NO. (if available)	2. MARK "X"			3. EFFLUENT							4. UNITS		5. INTAKE (optional)		
	a. Testing Required	a. Believed Present	b. Believed Absent	a. Maximum Daily Value		b. Maximum 30-Day Value (if available)		c. Long-Term Avg. Value (if available)		d. No. of Analyses	a. Concentration	b. Mass	a. Long-Term Avg Value		b. No. of Analyses
				(1) Concentration	(2) Mass	(1) Concentration	(2) Mass	(1) Concentration	(2) Mass				(1) Concentration	(2) Mass	
GC/MS FRACTION – BASE/NEUTRAL COMPOUNDS (Continued)															
13B. 4-Bromo-phenyl Phenyl ether (101-55-3)	X			BDL						1	mg/L				
14B. Butyl-benzyl phthalate (85-68-7)	X			BDL						1	mg/L				
15B. 2-Chloro-naphthalene (7005-72-3)	X			BDL						1	mg/L				
16B. 4-Chloro-phenyl phenyl ether (7005-72-3)	X			BDL						1	mg/L				
17B. Chrysene (218-01-9)	X			BDL						1	mg/L				
18B. Dibenzo-(a,h) Anthracene (53-70-3)	X			BDL						1	mg/L				
19B. 1,2-Dichloro-benzene (95-50-1)	X			BDL						1	mg/L				
20B. 1,3-Dichloro-Benzene (541-73-1)	X			BDL						1	mg/L				
21B. 1,4-Dichloro-benzene (106-46-7)	X			BDL						1	mg/L				
22B. 3,3-Dichloro-benzidene (91-94-1)	X			BDL						1	mg/L				
23B. Diethyl Phthalate (84-66-2)	X			BDL						1	mg/L				

Part C – Continued															
1. POLLUTANT And CAS NO. (if available)	2. MARK "X"			3. EFFLUENT							4. UNITS		5. INTAKE (optional)		
	a. Testing Required	a. Believed Present	b. Believed Absent	a. Maximum Daily Value		b. Maximum 30-Day Value (if available)		c. Long-Term Avg. Value (if available)		d. No. of Analyses	a. Concentration	b. Mass	a. Long-Term Avg. Value		b. No. of Analyses
				(1) Concentration	(2) Mass	(1) Concentration	(2) Mass	(1) Concentration	(2) Mass				(1) Concentration	(2) Mass	
GC/MS FRACTION – BASE/NEUTRAL COMPOUNDS (Continued)															
24B. Dimethyl Phthalate (131-11-3)	X			BDL						1	mg/L				
25B. Di-N-butyl Phthalate (84-74-2)	X			BDL						1	mg/L				
26B. 2,4-Dinitro-toluene (121-14-2)	X			BDL						1	mg/L				
27B. 2,6-Dinitro-toluene (606-20-2)	X			BDL						1	mg/L				
28B. Di-n-octyl Phthalate (117-84-0)	X			BDL						1	mg/L				
29B. 1,2-diphenyl-hydrazine (as azonbenzene) (122-66-7)	X			BDL						1	mg/L				
30B. Fluoranthene (208-44-0)	X			BDL						1	mg/L				
31B. Fluorene (86-73-7)	X			BDL						1	mg/L				
32B. Hexachloro-benzene (118-71-1)	X			BDL						1	mg/L				
33B. Hexachloro-butadiene (87-68-3)	X			BDL						1	mg/L				
34B. Hexachloro-cyclopenta-diene (77-47-4)	X			BDL						1	mg/L				

Part C – Continued															
1. POLLUTANT And CAS NO. (if available)	2. MARK "X"			3. EFFLUENT							4. UNITS		5. INTAKE (optional)		
	a. Testing Required	a. Believed Present	b. Believed Absent	a. Maximum Daily Value		b. Maximum 30-Day Value (if available)		c. Long-Term Avg. Value (if available)		d. No. of Analyses	a. Concentration	b. Mass	a. Long-Term Avg Value		b. No. of Analyses
				(1) Concentration	(2) Mass	(1) Concentration	(2) Mass	(1) Concentration	(2) Mass				(1) Concentration	(2) Mass	
GC/MS FRACTION – BASE/NEUTRAL COMPOUNDS (Continued)															
35B. Hexachloroethane (67-72-1)	X			BDL						1	mg/L				
36B. Indneo-(1,2,3-oc)-Pyrene (193-39-5)	X			BDL						1	mg/L				
37B. Isophorone (78-59-1)	X			BDL						1	mg/L				
38B. Napthalene (91-20-3)	X			BDL						1	mg/L				
39B. Nitrobenzene (98-95-3)	X			BDL						1	mg/L				
40B. N-Nitrosodimethylamine (62-75-9)	X			BDL						1	mg/L				
41B. N-nitrosodi-n-propylamine (621-64-7)	X			BDL						1	mg/L				
42B. N-nitrosodiphenylamine (86-30-6)	X			BDL						1	mg/L				
43B. Phenanthrene (85-01-8)	X			BDL						1	mg/L				
44B. Pyrene (129-00-0)	X			BDL						1	mg/L				
45B. 1,2,4 Trichlorobenzene (120-82-1)	X			BDL						1	mg/L				

Part C – Continued															
1. POLLUTANT And CAS NO. (if available)	2. MARK "X"			3. EFFLUENT							4. UNITS		5. INTAKE (optional)		
	a. Testing Required	a. Believed Present	b. Believed Absent	a. Maximum Daily Value		b. Maximum 30-Day Value (if available)		c. Long-Term Avg. Value (if available)		d. No. of Analyses	a. Concentration	b. Mass	a. Long-Term Avg. Value		b. No. of Analyses
				(1) Concentration	(2) Mass	(1) Concentration	(2) Mass	(1) Concentration	(2) Mass				(1) Concentration	(2) Mass	
GC/MS FRACTION – PESTICIDES															
1P. Aldrin (309-00-2)			X												
2P. α-BHC (319-84-6)			X												
3P. β-BHC (58-89-9)			X												
4P. gamma-BHC (58-89-9)			X												
5P. δ-BHC (319-86-8)			X												
6P. Chlordane (57-74-9)			X												
7P. 4,4'-DDT (50-29-3)			X												
8P. 4,4'-DDE (72-55-9)			X												
9P. 4,4'-DDD (72-54-8)			X												
10P. Dieldrin (60-57-1)			X												
11P. α-Endosulfan (115-29-7)			X												
12P. β-Endosulfan (115-29-7)			X												
13P. Endosulfan Sulfate (1031-07-8)			X												
14P. Endrin (72-20-8)			X												

Part C – Continued																
1. POLLUTANT And CAS NO. (if available)	2. MARK "X"			3. EFFLUENT							4. UNITS		5. INTAKE (optional)		
	a. Testing Required	a. Believed Present	b. Believed Absent	a. Maximum Daily Value		b. Maximum 30-Day Value (if available)		c. Long-Term Avg. Value (if available)		d. No. of Analyses	a. Concentration	b. Mass	a. Long-Term Avg Value		b. No. of Analyses
				(1) Concentration	(2) Mass	(1) Concentration	(2) Mass	(1) Concentration	(2) Mass				(1) Concentration	(2) Mass	
GC/MS FRACTION – PESTICIDES															
15P. Endrin Aldehyde (7421-93-4)			X												
16P Heptachlor (76-44-8)			X												
17P. Heptaclor Epoxide (1024-57-3)			X												
18P. PCB-1242 (53469-21-9)			X												
19P. PCB-1254 (11097-69-1)			X												
20P. PCB-1221 (11104-28-2)			X												
21P. PCB-1232 (11141-16-5)			X												
22P. PCB-1248 (12672-29-6)			X												
23P. PCB-1260 (11096-82-5)			X												
24P. PCB-1016 (12674-11-2)			X												
25P. Toxaphene (8001-35-2)			X												

LOUISVILLE GAS AND ELECTRIC COMPANY
TRIMBLE COUNTY STATION

KPDES Permit Application Synopsis

Name and Address of Applicant

(Corporate)
Louisville Gas and Electric Company
P.O. Box 32010
Louisville, Kentucky 40232
c/o Roger J. Medina

(Facility)
Trimble County Station
487 Corn Creek Road
Bedford, Kentucky 40006
c/o Diana Freibert

Description of Applicants' Operation

Fossil fuel fired steam electric power plant for the generation, transmission and distribution of electricity (SIC Code 4911 NAICS Code 221112). Located on a 2,247 acre site along the Ohio River at mile mark 572.0.

Production Capacity of Facility

Generation of electric power is from two fossil fired units with the following nameplate generating capacity:
Unit 1 – 566 MW
Unit 2 – 750 MW (under construction, operational 2010)
Units 5-10 – Six 170 MW natural gas fired combustion turbines.

Description of Submitted Outfalls
(Note: See attached flow diagrams and rainfall runoff calculations for flow and acreage information)

Outfall #001 – Contains the combined flows of stormwater runoff from plant roof drains, gas turbine evaporative cooler blowdown, gas turbine blade washings and various plant yard areas to a sedimentation basin. Discharge from the basin is controlled by a valve system. The basin is discharged to the Ohio River approximately once per month.

Trimble County Station – Outfall Synopsis – cont'd

Outfall #002 – Contains the combined flows from Units 1 and 2 cooling towers blowdown, excess process waters decanted from the gypsum storage basin and precipitation runoff into the basin. This combined flow is discharged to the Ohio River.
The cooling water is periodically brominated to control bio-fouling of the condenser as provided for in the current permit.

Outfall #003 – Contains flow from the facility package sewage treatment plant (STP) as an internal stream to the zero discharge ash basin.

Outfall #004 – Contains intermittent flow (potentially once or twice per 5-yr period) of wastewater generated during the chemical cleaning of the boiler tubes from the units. This internal stream is released to the zero discharge ash basin.

Outfall #005 – Plant intake water from the Ohio River used for service water, fire protection and cooling water.

Outfall #006 – Contains flow of stormwater runoff from the wooded hillside area northeast of the plant which has no contact with industrial processes, equipment or storage. Discharged to Corn Creek.

Outfall #007 – Contains flow of stormwater runoff from the wooded hillside east of the plant and the aesthetic berm south of the plant. These areas have contact with industrial discharges, equipment or storage. Discharged to Barebone Creek.

Outfall #008 – Contains flow of stormwater runoff from the "borrow pit" between the plant and the Ohio River. This borrow area contains the silt dredged from the river as provided for under our Corps of Engineers permit. Discharged to the Ohio River.

Outfall #009 – Contains flow of stormwater runoff from the southwest plant yard and the aesthetic berm area which has no contact with industrial processes, equipment or storage. Discharged to the Ohio River.

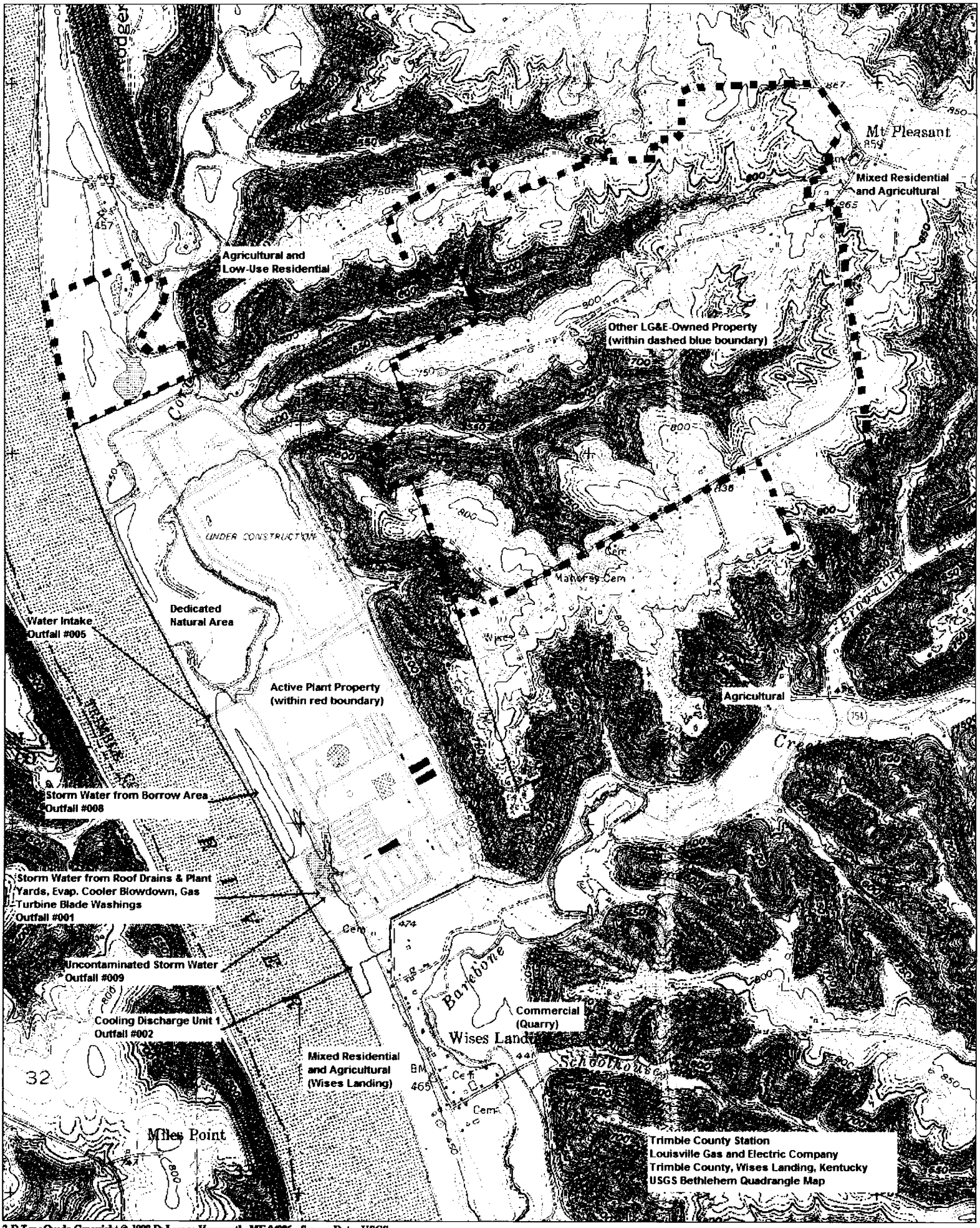

3-D TopoQuads Copyright © 1999 DeLorme Yarmouth, ME 04096 Source Data: USGS

750 ft Scale: 1 : 25,000 Detail: 13-0 Datum: WGS84

April 9, 2007

TRIMBLE COUNTY GENERATING STATION

Description of Pollution Abatement Facilities

Discharge Description			FLOWS 1-Day MGD	FLOWS 30-Day MGD
001	**Sedimentation Basin Discharge to Ohio River:**			
1	Precipitation - Areas 5-12 Runoff			
a	Precipitation - Area 5 - Boiler, Turbine & FGD Buildings Areas		**2.1167**	**0.0561**
b	Precipitation - Area 6 - Unit 1 Cooling Tower (new) & Adjacent Areas		**1.8257**	**0.0484**
c	Precipitation - Area 7 - Unit 2 Cooling Tower (hyperbolic), Water Treatment Bldg-Yards		**0.7004**	**0.0186**
d	Precipitation - Area 8 - Construction Offices/shops & Parking Runoff		**1.0607**	**0.0281**
e	Precipitation - Area 9 - Plant Substation Runoff		**0.8183**	**0.0217**
f	Precipitation - Area 10 - Comb. Turbines CT-Switchyard, Warehouse C Runoff		**2.0500**	**0.0544**
g	Precipitation - Area 11 - Fuel Oil Storage Tanks & Bermed Area Runoff		**0.0929**	**0.0025**
h	Precipitation - Area 12 - Sedimentation Basin & Adjacent Yard Runoff		**1.1883**	**0.0315**
		Precipitation Subtotal	*9.8530*	*0.2613*
2	Combustion Turbines 5-10 Evaporative Coolers Blowdown Flow		0.0052	0.0052
3	Combustion Turbines 5-10 Blade Washwaters (2/yr each)		0.0001	0.0001
	Total		**9.8583**	**0.2666**
002	**Units 1 & 2 Once-Thru Cooling Water from Miscellaneous Plant Heat Exchangers and Yard Drainage to the Ohio River:**			
1.	Units 1-2 Cooling Tower Blowdowns		6.8238	6.8238
2.	Gypsum Storage Basin			
a	Precipitation - Area 13 - Bottom Ash Storage Area Runoff		**0.5549**	**0.0147**
b	Precipitation - Area 14 - Gypsum Storage Basin Runoff		**1.1404**	**0.0302**
c	Water Treatment Building - Filtration-Demineralization Regeneration Process Flows		0.2111	0.2111
d	FGD-Sluiced Gypsum Process Waters		0.3088	0.3088
e	FGD-Marketed Gypsum Filtration/Processing Excess Reclaim Waters		1.2113	1.2113
		Precipitation Subtotal	*3.4265*	*1.7761*
	Total		**10.2503**	**8.5999**
---	**ZERO-DISCHARGE Bottom Ash & Fly Ash Treatment Basin (BAP-ATB)**			
1	Units 1-2 Fly Ash Sluice Water	***RECIRCULATED***	3.6192	3.6192
2	Units 1-2 (Dry) Fly Ash Handling Area - Washdowns, etc	***RECIRCULATED***	0.0012	0.0012
3	Unit 1 Bottom Ash & Pyrites Sluice Waters	***RECIRCULATED***	1.3920	1.3920
4	Unit 2 Pyrites Sluicing & Bottom Ash Handling/Dewatering	***RECIRCULATED***	1.1136	1.1136
5	Units 1-2 Air Heater Washwaters	***RECIRCULATED***	0.0067	0.0067
6	Unit 1 Turbine-Boiler Room - Seal Overflow Sumpwaters	***RECIRCULATED***	0.3480	0.3480
7	Unit 2 Turbine-Boiler Room- Floor Drains -Oil/Water Separator Flows	***RECIRCULATED***	0.0195	0.0195
8	Unit 2 Boiler - Common Wastewater Sumpwaters (less O/W Separator)	***RECIRCULATED***	0.1740	0.1740
9	Coal Pile and Limestone Pile Runoff Pond Discharge			
a	Precipitation - Area 2 -Coal Pile, Handling & Mat.Handling Maintenance Runoff		**2.9413**	**0.0780**
b	Precipitation - Area 3 - Limestone Pile & Handling Area Runoff		**0.8442**	**0.0224**
c	Precipitation - Area 4 - Basin & Adjacent Yard Runoff		**0.3909**	**0.0104**
10	Precipitation - Area 1 - Combined Bottom Ash & Fly Ash Basin		**10.2810**	**0.2727**
		Precipitation Subtotal	*14.4574*	*0.3835*
4	Sewage Treatment Plant Discharge		0.0430	0.0430
8	Boiler Chemical Cleaning Wastewaters		0.0100	0.0100
	SUBTOTAL		**14.5104**	**0.4365**
	Basin Evaporative Losses (conservatively assumes only natural evaporation)			
	Mean annual evapotranspiration = 30" of total 43.56" precipitation (0.688) for Area 1		-7.5216	-0.1994
	FGD Process Reclaim-Consumption Waters ***(REQ'd TO MAINTAIN WATER BALANCE)***		6.9889	0.2370
	Service Water Make-up (***Average***) to Combined Ash Basin (FGD use = 2.2043 MGD)		1.9673	1.9673
	(Overflowing Ash Treatment Basin is prevented because FGD daily Reclaim Ash Waters use ~ 2.2 MGD (much >0.25 MGD) and Temporary Daily accumulations handled within Basin freeboard and consumed in successive days)			
	TOTAL		**0**	**0**

LG&E TRIMBLE COUNTY GENERATING STATION

Description of Pollution Abatement Facilities - *continued*

Discharge Description - *Continued*

				1-Day GPD	30-Day GPD
006	**Uncontaminated Runoff from woods NE of plant**				
	Area 15 Ravines A-C and Wooded Hillside Areas East of Highway 1838	1437.82	acres	**44.3151**	**1.1753**
007	**Uncontaminated Runoff Area B-Woods East-plant & South Aesthetic Berm**				
	Area 16 Plant Entrance (southeast field) & Aesthetic Berm Drainage (east h	13.11	acres	**0.4740**	**0.0126**
008	**Storm Water Runoff from Borrow/Dredged-Silt Pit "C"**				
	Area 17 Borrow Area "C" (dredged silt placement) Runoff	27.86	acres	**0.9195**	**0.0244**
	Area 18 Plant Field East-Adjacent Borrow Area "C" Runoff	6.59	acres	**0.2451**	**0.0065**
009	**Uncontaminated Runoff SouthWest Plant Area & aesthetic berm**				
	Area 19 Southwest Plant Yard (Adj. Barge Eqpt. Unload. Dock) Runoff	8.92	acres	**0.3388**	**0.0090**
Non-Point Uncontaminated Runoff Areas to Ohio River					
	Area 20 Plant Property South of Hwy 754 & Trans Area (Rowlett Farm)	67.31	acres	**2.2156**	**0.0588**
	Area 21 SW Plant Property & Aesthetic Berm (west half) Runoff	18.87	acres	**0.6111**	**0.0162**
	Area 22 Riverbank South of Limestone Barge Unloader (adj. Area 19)	4.70	acres	**0.1718**	**0.0046**
	Area 23 Riverbank South of Coal Barge Unloader to LBU	9.57	acres	**0.3084**	**0.0082**
	Area 24 Riverbank North of Coal Barge Unload. to Wildlife Refuge Area	2.77	acres	**0.1054**	**0.0028**
	Area 25 Upland Yard Adj. Wildlife Refuge Area & Coal Pile & BAP-ATB	7.59	acres	**0.2539**	**0.0067**
	Area 26 Wildlife Refuge Area	106.90	acres	**3.2791**	**0.0870**
	Area 27 External Slopes of Ash Treatment Basin (BAP-ATB)	13.02	acres	**0.3976**	**0.0105**
	Area 28 N-W External Slopes of Gypsum Storage Basin (EFAP)	7.92	acres	**0.2968**	**0.0079**
	Area 29 Corn Creek & Bottomland Adj. Gypsum Storage Basin (EFAP)	59.56	acres	**1.8911**	**0.0502**
	Area 30 Riverbank of North Plant Borrow Property (Dickey Farm)	21.18	acres	**0.6471**	**0.0172**
	Area 31 Woods & Fields of North Plant Borrow Property (Dickey Farm)	58.23	acres	**acres**	**0.0000**
	TOTAL	377.62	acres		

Louisville Gas & Electric Co
TRIMBLE COUNTY GENERATING STATION

April 9, 2007

Rainfall Runoff Calculations

Data

Area	# Acres	
Coefficient for Rainfall Runoff	Cr	
10 Year 24 Hour Rainfall	4.5	inch/24 hours
Annual Average Rainfall	43.56	inch/year

Runoff Equations:

1-Day Flow:
(#Acres)(43560 ft2)/Acre)(Cr)(4.1 in/day)(1 ft/12 inch)(7.48 gal/ft3)(1MG/1000000 gal)

MGD = (# Acres) x (Cr) x **0.1221858**

30-Day Flow:
(#Acres)(43560 ft2)/Acre)(Cr)(43.56 in/yr)(1 ft/12 inch)(7.48 gal/ft3)(1MG/1000000 gal)

MGD = (# Acres) x (Cr) x **0.00324043**

Definition of Runoff Coefficients:

	Cr
Vegetated Areas (without slope considerations)	0.25
Gypsum & Loose Gravel (substations, rail beds, dam face, rock-faced slopes, etc.)	0.25
Packed Surfaces (Coal, Bare Soil, Packed Gravel [Roads, Parking Areas, etc.])	0.5
Impervious Surfaces (Pavement, Roofs, Cooling Tower Direct Precip)	0.85
Basin Surfaces	1

Louisville Gas & Electric Co
TRIMBLE COUNTY GENERATING STATION

KPDES OUTFALLS DESCRIPTION		*Outfall Location*
001	Sedimentation Basin Stormwater Runoff Flows (plant roof & yard areas) and Combution Turbine Process Flows	Sedimentation Retention Basin
002	Unit 1-2 Cooling Tower Blowdown & FGD-Gypsum Decant Waters	Southside Eqpt Unloading Dock
003	Sanitary Wastewater (internal outfall)	SE of Main Guard Gate
004	Metal Cleaning Wastes (internal outfall)	(Frac Tanks)
005	Plant Intake	River Water Intake Structure
006	Uncontaminated Runoff from wood NE of plant	Corn Creek NW along Hwy 1838
007	Uncontaminated Runoff Area B-woods east of plant & south aesthetic berm	NE Culvert Hwy 1838 and Hwy 754
008	Storm Water Runoff from Borrow/Dredged-Silt Pit "C"	Pipe inside Pit "C"
009	Uncontaminated Runoff SouthWest Plant Area & aesthetic berm	Drainage Culvert below Sediment. Basin

STORMWATER RUNOFF AREAS		*DISCHARGE TO:*
Area 1	Bottom Ash & Fly Ash Treatment Basin (BAP-ATB)	Zero Discharge/Recirculated
Area 2	Coal Pile, Coal Handling and Material Handling Maintenance Area	Pile Runoff Retention Basin
Area 3	Limestone Pile & Handling Area	Pile Runoff Retention Basin
Area 4	Coal Pile & Limestone Pile Runoff Retention Basin	BAP-ATB
	#001 KPDES Outfall	
Area 5	Powerhouse Roof & Adjacent Yard Runoff Areas	Sedimentation Runoff Basin
Area 6	Unit 1 Cooling Tower (new), BAP-ATB southeast external slope, Highway 1838 West Roadside & Yard Runoff Areas	" " "
Area 7	Unit 2 Cooling Tower (hyperbolic), Water Treatment Building Area & Yard Runoff Areas	" " "
Area 8	Construction Office-Shops Buildings Area	" " "
Area 9	Plant Substation	" " "
Area 10	Combustion Turbines, CT-Switchyard & Warehouse C Area	" " "
Area 11	Fuel Oil Storage Tanks & Bermed Areas	" " "
Area 12	Sedimentation Basin & Adjacent Yard Runoff Area	Outfall #001 (valved)
	#002 KPDES Outfall	
Area 13	Bottom Ash Stack Area	Gypsum Stack-Basin
Area 14	Gypsum Storage Basin (decant waters recycled to FGD & blowdown to #002)	Outfall #002
	#006 KPDES Outfall	
Area 15	Ravines A-C and Wooded Hillside Areas East of Highway 1838	Outfall #006 (Corn Creek)
	#007 KPDES Outfall	
Area 16	Plant Entrance (southeast field) & Aesthetic Berm Drainage (east half)	
	#008 KPDES Outfall	
Area 17	Borrow Area "C" (dredged silt placement) Runoff	Outfall #008 (elevated pipe)
Area 18	Plant Field East-Adjacent Borrow Area "C" Runoff	Borrow Area "C"
	#009 KPDES Outfall	
Area 19	Southwest Plant Yard (Adjacent Barge Equipment Unloading Dock) Runoff	Outfall #009
	Non-Point Source Areas Runoff (Non-Process)	
Area 20	Plant Property South of Highway 754 & Transmission Lines Area (Rowlett Farm)	
Area 21	Southwest Plant Property & Aesthetic Berm (west half) Runoff	
Area 22	Riverbank South of Limestone Barge Unloader to Barge Equipment Unloader Area (adj.Area 19)	
Area 23	Riverbank Area South of Coal Barge Unloader to LBU	
Area 24	Riverbank Area North of Coal Barge Unloader to Wildlife Refuge Area	
Area 25	Upland Yard Adjacent Wildlife Refuge Area & Coal Pile & BAP-ATB	
Area 26	Wildlife Refuge Area	
Area 27	External Slopes of Ash Treatment Basin (BAP-ATB)	
Area 28	North & West External Slopes of Gypsum Stack-Basin & Bottom Ash Stack (EFAP)	
Area 29	Corn Creek & Bottomland Surrounding Gypsum Stack-Basin & Bottom Ash Stack (EFAP)	
Area 30	Riverbank of North Plant Borrow Property (Dickey Farm)	
Area 31	Woods & Fields of North Plant Borrow Property (Dickey Farm)	

TOTAL SITE PROPERTY **2247.15** **acres**

Plant Property Areas - Rainfall Runoff Calculations
(Arranged by Outfalls)

Zero Discharge - Ash Treatment Basin

Area # Outfall	Source	Cr	#Acres	1-Day (MGD)	30-Day (MGD)
Area 1 (zero)	**Bottom Ash & Fly Ash Treatment Basin (BAP-ATB) process & recirculated sluice waters, stormwater** Zero Discharge (completely recirculated/consumed)				
	a. Basin Surface	1	84.14	10.2810	0.2727
	b. Inner Berm Grass & Gravel Slopes	0.25	13.91	0.4249	0.0113
	c. Perimeter Gravel Road (full roadway area)	0.5	3.53	0.2154	0.0057
	d. Outer Berm Slopes (see uncontaminated runoff Area s27 & 28 calc's)				
	TOTAL AREA		101.58	10.9213	0.2896
Area 2	**Coal Pile, Coal Handling and Material Handling Maintenance Area**				
	a. Coal Pile Storage	0.5	42.49	2.5960	0.0688
	b. Building Roofs	0.85	1.47	0.1526	0.0040
	c. Materials Handling Maintenance Area (gravel)	0.5	0.87	0.0534	0.0014
	c. Asphalt Roadway	0.85	1.34	0.1393	0.0037
	TOTAL AREA		46.18	2.9413	0.0780
Area 3	**Limestone Pile & Handling Area**				
	a. Limestone Pile Storage	0.5	9.79	0.5982	0.0159
	b. Building Roofs	0.85	1.72	0.1785	0.0047
	c. Asphalt Roadway	0.85	0.65	0.0675	0.0018
	TOTAL AREA		12.16	0.8442	0.0224
Area 4	**Coal Pile & Limestone Pile Runoff Retention Basin**				
	a. Basin Surface	1.0	2.12	0.2589	0.0069
	b. Inner Slopes (vegetated and exposed/deposited solids)	0.25	2.79	0.0852	0.0023
	c. Asphalt Roadway	0.85	0.45	0.0468	0.0012
	TOTAL AREA		5.36	0.3909	0.0104

001 - Plant Stormwater Runoff Waters and Combustion Turbine Process Flows

Area # Outfall	Source	Cr	#Acres	1-Day (MGD)	30-Day (MGD)
Area 5	**Powerhouse Roof & Adjacent Yard Runoff Areas**				
	a. Powerhouse & Outside Equipment Roofs	0.85	10.13	1.0524	0.0279
	b. Grass & Gravel Yard Areas	0.25	23.53	0.7188	0.0191
	c. Asphalt Roadway - interior	0.85	2.09	0.2169	0.0058
	d. Asphalt Roadway - perimter	0.85	1.24	0.1287	0.0034
	TOTAL AREA		36.99	2.1167	0.0561
Area 6	**Unit 1 Cooling Tower (new), BAP-ATB southeast external slope, Highway 1838 west roadside & Yard Runoff Areas**				
	a. Cooling Tower Structure	0.85	0.99	0.1032	0.0027
	b. Grass & Gravel Yard Areas	0.25	42.19	1.2887	0.0342
	c. Building Roofs	0.85	0.24	0.0245	0.0007
	d. Ash Treatment Basin (BAP-ATB) External Southeast Grass Slopes and Highway 1838 Roadside Ditch (Southern half) drainage into Area 6	0.25	3.24	0.0988	0.0026
	e. Highway 1838 Roadside slopes West-adjacent Area 6 and BAP	0.25	1.34	0.0410	0.0011
	f. Asphalt Roadways - perimeter	0.85	2.60	0.2695	0.0071
	TOTAL AREA		50.59	1.8257	0.0484
Area 7	**Unit 2 Cooling Tower (hyperbolic), Water Treatment Building Area & Yard Runoff Areas**				
	a. Cooling Tower Structure	0.85	2.69	0.2798	0.0074
	b. Grass & Gravel Yard Areas	0.25	8.30	0.2534	0.0067
	c. Building Roofs (Coal Conveyors & Water Treatment-Lab)	0.85	1.09	0.1128	0.0030
	d. Asphalt Roadways (3 sides)	0.85	0.52	0.0543	0.0014
	TOTAL AREA		12.60	0.7004	0.0186
Area 8	**Construction Office-Shops Buildings Area**				
	a. Building Roofs	0.85	2.11	0.2194	0.0058
	b. Asphalt Raodway & Parking Areas (including Easthalf USHwy 1838)	0.85	3.72	0.3859	0.0102
	c. Gravel Parking Areas	0.25	10.43	0.3185	0.0084
	d. Sewage Treatment Plant (including STP Building Roof)	0.85	0.11	0.0117	0.0003
	e. Outside Perimeter Asphalt Road, incl. HWY 1838	0.85	1.21	0.1252	0.0033
	TOTAL AREA		17.57	1.0607	0.0281
Area 9	**Plant Substation**				
	a. Gravelled Equipment & Roadway Areas	0.5	12.16	0.7428	0.0197
	b. Building Roofs	0.85	0.11	0.0116	0.0003
	c. Asphalt Roadways	0.85	0.62	0.0640	0.0017
	TOTAL AREA		12.89	0.8183	0.0217
Area 10	**Combustion Turbines, CT-Switchyard & Warehouse C Area**				
	a. Combustion Turbines Equipment & Auxilliary Building Roofs	0.85	1.15	0.1192	0.0032
	b. Gravelled CT-Switchyard & Adjacent Areas	0.85	14.37	1.4923	0.0396
	c. Warehouse C Roof	0.85	1.01	0.1045	0.0028
	d. Grass Areas	0.25	4.47	0.1365	0.0036
	e. Inside Asphalt Areas	0.85	1.01	0.1045	0.0028
	f. Asphalt Roadways - Perimter	0.85	0.90	0.0930	0.0025
	TOTAL AREA		22.89	2.0500	0.0544
Area 11	**Fuel Oil Storage Tanks & Bermed Areas**				
	a. Storage Tanks & Fuel Oil Pumphouse Roofs	0.85	0.05	0.0050	0.0001
	b. Grass Berm & Inner Slope Areas	0.25	2.38	0.0728	0.0019
	c. Asphalt Roadways	0.85	0.14	0.0150	0.0004
	TOTAL AREA		2.58	0.0929	0.0025
Area 12	**Sedimentation Basin & Adjacent Yard Runoff Area**				
	a. Basin Surface	1.0	6.62	0.8089	0.0215
	b. Grass Berm & Inner Slope Areas	0.25	8.70	0.2658	0.0070
	c. Asphalt Roadways	0.85	1.09	0.1136	0.0030
	TOTAL AREA		16.42	1.1883	0.0315

002 - Unit 1-2 Cooling Tower Blowdown & FGD-Gypsum Decant Waters

Area # Outfall	Source	Cr	#Acres	1-Day (MGD)	30-Day (MGD)
Area 13	**Bottom Ash Stack Area**				
	a. Stacked Bottom Ash	0.25	8.21	0.2508	0.0067
	b. Inner Slopes	0.25	8.78	0.2681	0.0071
	c. Asphalt Roadway	0.85	0.35	0.0360	0.0010
	TOTAL AREA		17.34	0.5549	0.0147
Area 14	**Gypsum Stack Basin (decant waters recycled to FGD & blowdown to #002)**				
	Controlled Discharge to Combine with Cooling Tower Blowdown Stream (#002) to Ohio River				
	a. Basin Surface	1.0	5.36	0.6549	0.0174
	b. Stacked Gypsum	0.25	5.36	0.1637	0.0043
	c. Inner Slopes	0.25	8.89	0.2716	0.0072
	d. Asphalt Roadway	0.85	0.48	0.0502	0.0013
	TOTAL AREA		20.09	1.1404	0.0302

006 - Uncontaminated Runoff from wood NE of plant

Area 15	**Ravines A-C and Wooded Hillside Areas East of Highway 1838**				
	a. Ravine A (Watershed if Impounded or Landfilled including Dam Structure)	0.25	409.94	12.5223	0.3321
	b. Ravine B (Watershed if Impounded or Landfilled including Dam Structure)	0.25	710.32	21.6976	0.5754
	c. Ravine C (Watershed if Impounded or Landfilled including Dam Structure)	0.25	81.60	2.4925	0.0661
	d. Vegetated Areas Downstream of Ravines and US Highway 1838				
	Northeast Roadside Before Drainage Under Road Culvert Pipe to Corr	0.25	129.37	3.9519	0.1048
	e. Vegetated Area to Barebone Creek, including SE Highway 1838	0.25	101.21	3.0915	0.0820
	f. Asphalt Roadways (Highways 1838 & 754)	0.85	5.39	0.5594	0.0148
	TOTAL AREA		1437.82	44.3151	1.1753

007 - Uncontaminated Runoff Area B-Woods East-plant & South Aesthetic Berm

Area 16	**Plant Entrance (southeast field) & Aesthetic Berm Drainage (east half)**				
	a. Gravel Road Area (Interior)	0.5	0.17	0.0105	0.0003
	b. Grass Areas and Highway 1838 Roadside slopes West-adjacent Areas 9 a	0.25	12.01	0.3667	0.0097
	c. Asphalt Roadway (US Hwy 1838 to Area 8 and Highway 754 Northhalf)	0.85	0.93	0.0968	0.0026
	TOTAL AREA		13.11	0.4740	0.0126

008 - Storm Water Runoff from Borrow/Dredged-Silt Pit "C"

Area 17	**Borrow Area "C" (dredged silt placement) Runoff**				
	a. Borrow Area and Internal Slopes	0.25	26.45	0.8078	0.0214
	b. Perimeter Gravel Roadway (full road area, inward draining)	0.5	0.82	0.0499	0.0013
	c. Asphalt Roadway (Sections adjacent to Coal Pile & Area 18)	0.85	0.59	0.0617	0.0016
	TOTAL AREA		27.86	0.9195	0.0244
Area 18	**Plant Field East-Adjacent Borrow Area "C" Runoff**				
	a. Grass Yard Area	0.25	6.00	0.1832	0.0049
	b. Asphalt Roadway	0.85	0.60	0.0619	0.0016
	TOTAL AREA		6.59	0.2451	0.0065

009 - Uncontaminated Runoff SouthWest Plant Area & aesthetic berm

Area 19	**Southwest Plant Yard (Adjacent Barge Equipment Unloading Dock) Runoff**				
	a. Grass Area & External Slopes of Sediment Pond (Area 12)	0.25	7.44	0.2273	0.0060
	b. Barge Dock Area (gravel)	0.5	0.65	0.0395	0.0010
	c. Asphalt Roadway	0.85	0.50	0.0515	0.0014
	d. Gravel Roadway	0.5	0.34	0.0205	0.0005
	TOTAL AREA		8.92	0.3388	0.0090

Non-Point Source Areas Runoff (Non-Process)

Area # Outfall	Source	Cr	#Acres	1-Day (MGD)	30-Day (MGD)
Area 20	**Plant Property South of Highway 754 & Transmission Lines Area (Rowlett Farm)**				
	a. Grass-Vegetated Areas	0.25	61.15	1.8680	0.0495
	b. Highway 754 ROW area (grass)	0.25	6.16	0.1882	0.0050
	c. Asphalt Roadway	0.85	1.54	0.1595	0.0042
	TOTAL AREA		67.31	2.2156	0.0588
Area 21	**Southwest Plant Property & Aesthetic Berm (west half) Runoff**				
	a. Grass-Vegetated Areas (including riverbank)	0.25	18.40	0.5620	0.0149
	b. Asphalt Roadway	0.85	0.47	0.0492	0.0013
	TOTAL AREA		18.87	0.6111	0.0162
Area 22	**Riverbank South of Limestone Barge Unloader to Barge Equipment Unloader Area (adj.Area 19)**				
	a. Grass-Vegetated Areas	0.25	4.32	0.1319	0.0035
	b. Gravel Roadway	0.85	0.38	0.0399	0.0011
	TOTAL AREA		4.70	0.1718	0.0046
Area 23	**Riverbank Area South of Coal Barge Unloader to LBU**				
	a. Grass-Vegetated Areas	0.25	9.24	0.2821	0.0075
	b. Building Roof	0.85	0.14	0.0143	0.0004
	c. Gravel Roadway	0.5	0.20	0.0120	0.0003
	TOTAL AREA		9.57	0.3084	0.0082
Area 24	**Riverbank Area North of Coal Barge Unloader to Wildlife Refuge Area**				
	a. Grass-Vegetated Areas	0.25	2.43	0.0742	0.0020
	b. Building Roofs	0.85	0.24	0.0249	0.0007
	b. Gravel Roadway	0.5	0.10	0.0063	0.0002
	TOTAL AREA		2.77	0.1054	0.0028
Area 25	**Upland Yard Adjacent Wildlife Refuge Area & Coal Pile & BAP-ATB**				
	a. Grass-Vegetated Areas	0.25	7.16	0.2188	0.0058
	b. Gravel Roadway	0.5	0.22	0.0133	0.0004
	c. Asphalt Roadway	0.85	0.21	0.0218	0.0006
	TOTAL AREA		7.59	0.2539	0.0067
Area 26	**Wildlife Refuge Area**				
	a. Grass-Vegetated Areas	0.25	106.45	3.2518	0.0862
	b. Gravel Roadway (south end)	0.5	0.45	0.0273	0.0007
	TOTAL AREA		106.90	3.2791	0.0870
Area 27	**External Slopes of Ash Treatment Basin (BAP-ATB)**				
	a. Grass-Vegetated Areas	0.25	13.02	0.3976	0.0105
	TOTAL AREA		13.02	0.3976	0.0105
Area 28	**North & West External Slopes of Gypsum Stack-Basin & Bottom Ash Stack (EFAP)**				
	a. Grass-Vegetated Areas	0.25	7.81	0.2386	0.0063
	b. Gravel Roadway	0.5	0.11	0.0064	0.0002
	c. Asphalt Roadway	0.85	0.50	0.0518	0.0014
	TOTAL AREA		7.92	0.2968	0.0079
Area 29	**Corn Creek & Bottomland Surrounding Gypsum Stack-Basin & Bottom Ash Stack (EFAP)**				
	a. Grass-Vegetated Areas	0.25	53.42	1.6319	0.0433
	b. Gravel Roadway (interior)	0.5	0.42	0.0255	0.0007
	c. Grass & vegetated areas, NE portion of slope between BAP & Highway 18	0.25	4.91	0.1500	0.0040
	d. Asphalt Roadway - HWY 1838 & east side of Bottom Ash stack area	0.85	0.81	0.0837	0.0022
	TOTAL AREA		59.56	1.8911	0.0502
Area 30	**Riverbank of North Plant Borrow Property (Dickey Farm)**				
	a. Grass-Vegetated Areas	0.25	21.18	0.6471	0.0172
	TOTAL AREA		21.18	0.6471	0.0172
Area 31	**Woods & Fields of North Plant Borrow Property (Dickey Farm)**				
	a. Grass-Vegetated Areas	0.25	58.23	1.7786	0.0472
	TOTAL AREA		58.23	0.6471	0.0172

TOTAL SITE PROPERTY **2247.15** **acres**

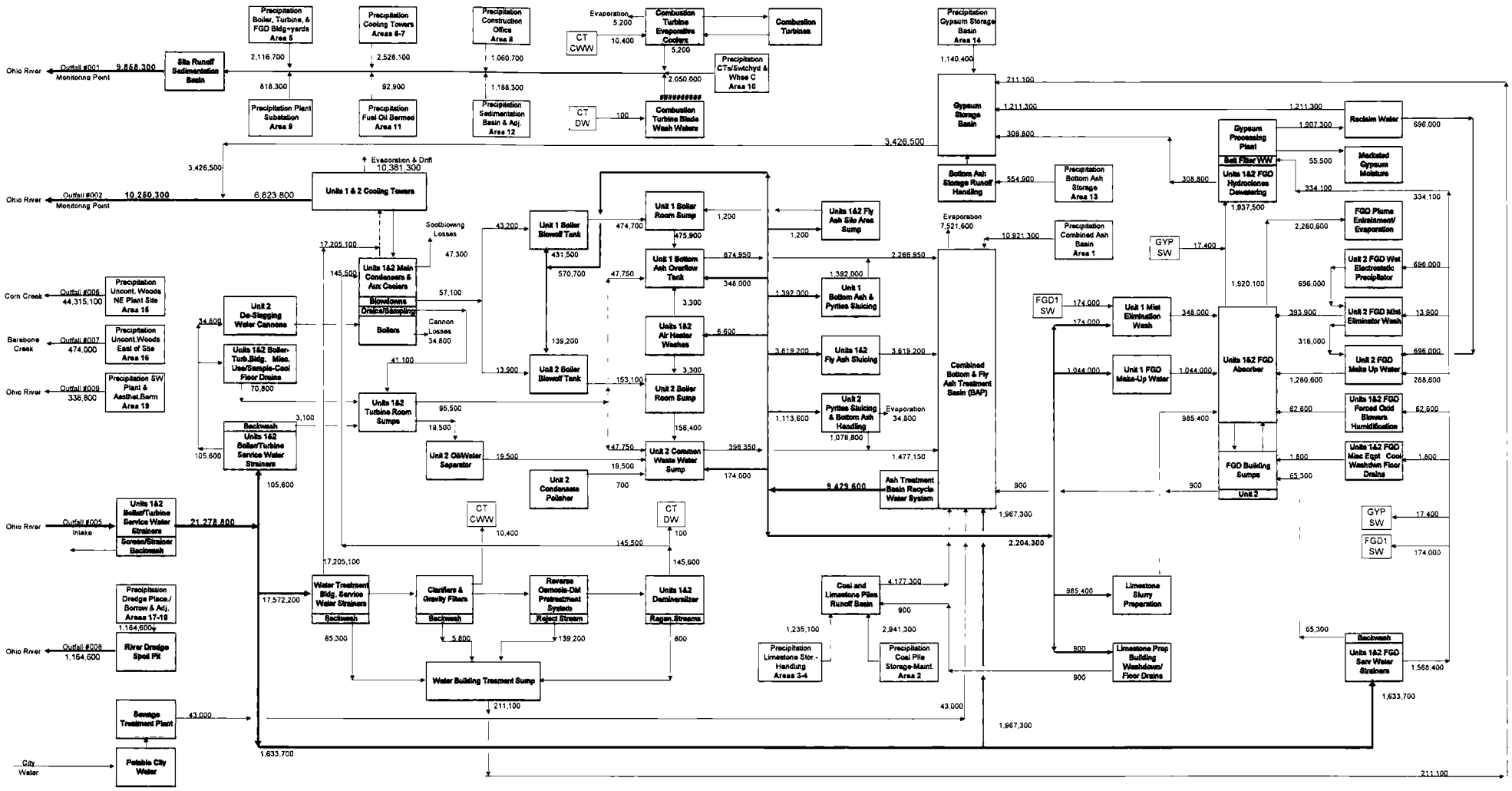

NOTES:
1. All Flows expressed in gallons per day
2. Diagram Flows Include PMAC Flows and Precipitation Runoff Flows Added
3. PMAC (Peak Monthly Average Conditions) Process Flows Are Representative of Monthly Conditions Calculated as a Daily Average = 28 days Average Operational Flows + 1 Day Maximum Flows + 1 Day Maintenance Flows

TRIMBLE COUNTY GENERATING STATION - KDPES WATER BALANCE DIAGRAM PEAK MONTHLY AVERAGE CONDITIONS (PMAC) - PROCESS FLOWS PMAC CONDITIONS + 1-DAY MAXIMUM RAINFALL RUNOFF FLOWS		PREPARED BY: RJM / WPP DATE: 4/09/2007 Revision 3	LG&E an E-ON company	TRIMBLE COUNTY GENERATING STATION WATER BALANCE DIAGRAM PMAC PROCESS CONDITIONS AND 1-DAY MAXIMUM RAINFALL PERMIT NO. KY 0041971

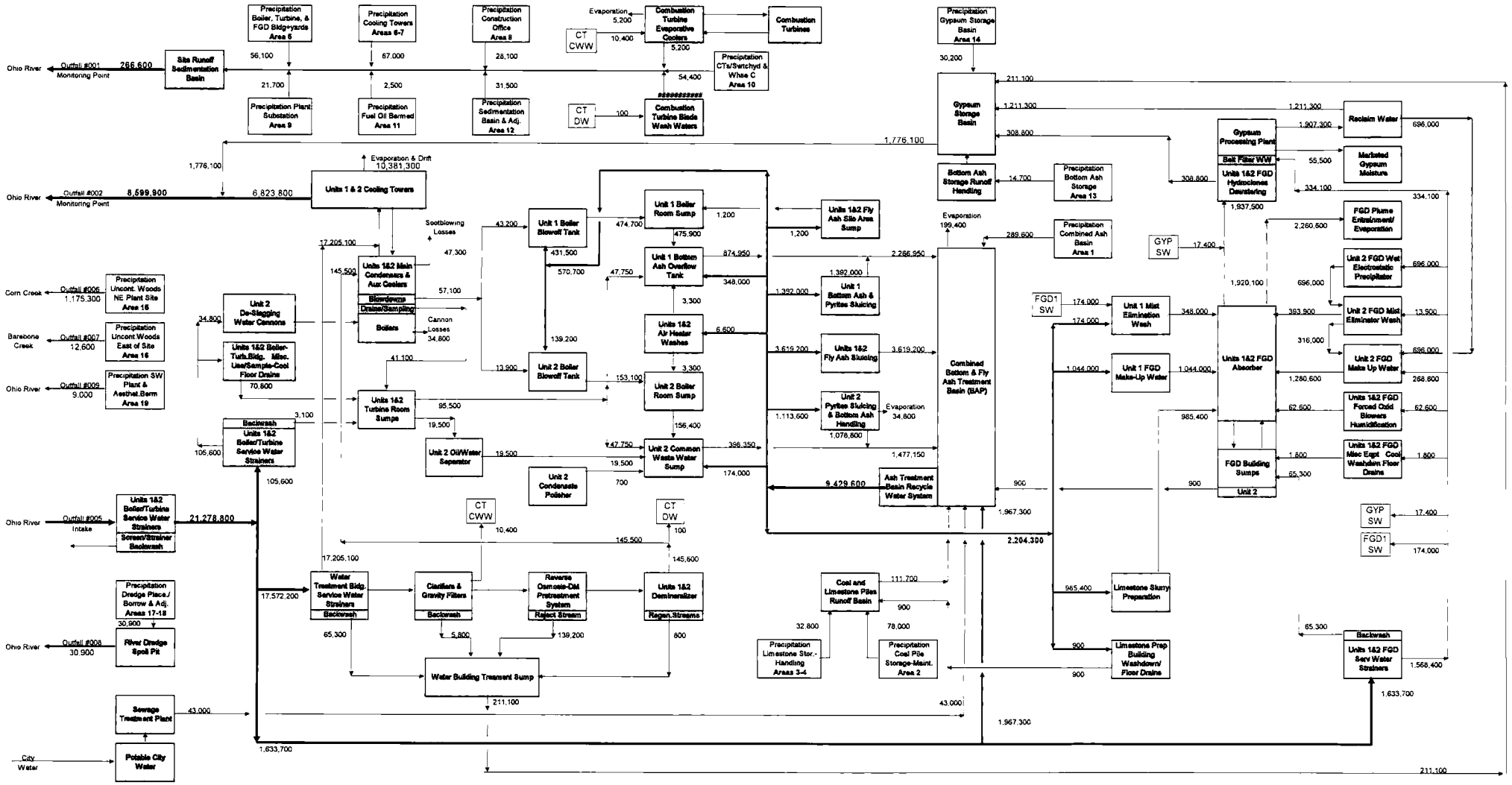

NOTES:
1. All Flows expressed in gallons per day
2. Diagram Flows include PMAC Flows and Precipitation Runoff Flows Added
3. PMAC (Peak Monthly Average Conditions) Process Flows Are Representative of Monthly Conditions Calculated as a Daily Average = 28 days Average Operational Flows + 1 Day Maximum Flows + 1 Day Maintenance Flows

TRIMBLE COUNTY GENERATING STATION - KDPES WATER BALANCE DIAGRAM PEAK MONTHLY AVERAGE CONDITIONS (PMAC) - PROCESS FLOWS PMAC CONDITIONS + AVERAGE RAINFALL RUNOFF FLOWS		PREPARED BY RJM / WPP DATE: 4/09/2007 Revision 3	LG&E an e-on company	TRIMBLE COUNTY GENERATING STATION WATER BALANCE DIAGRAM PMAC PROCESS CONDITIONS AND AVERAGE RAINFALL PERMIT NO. KY 0041971

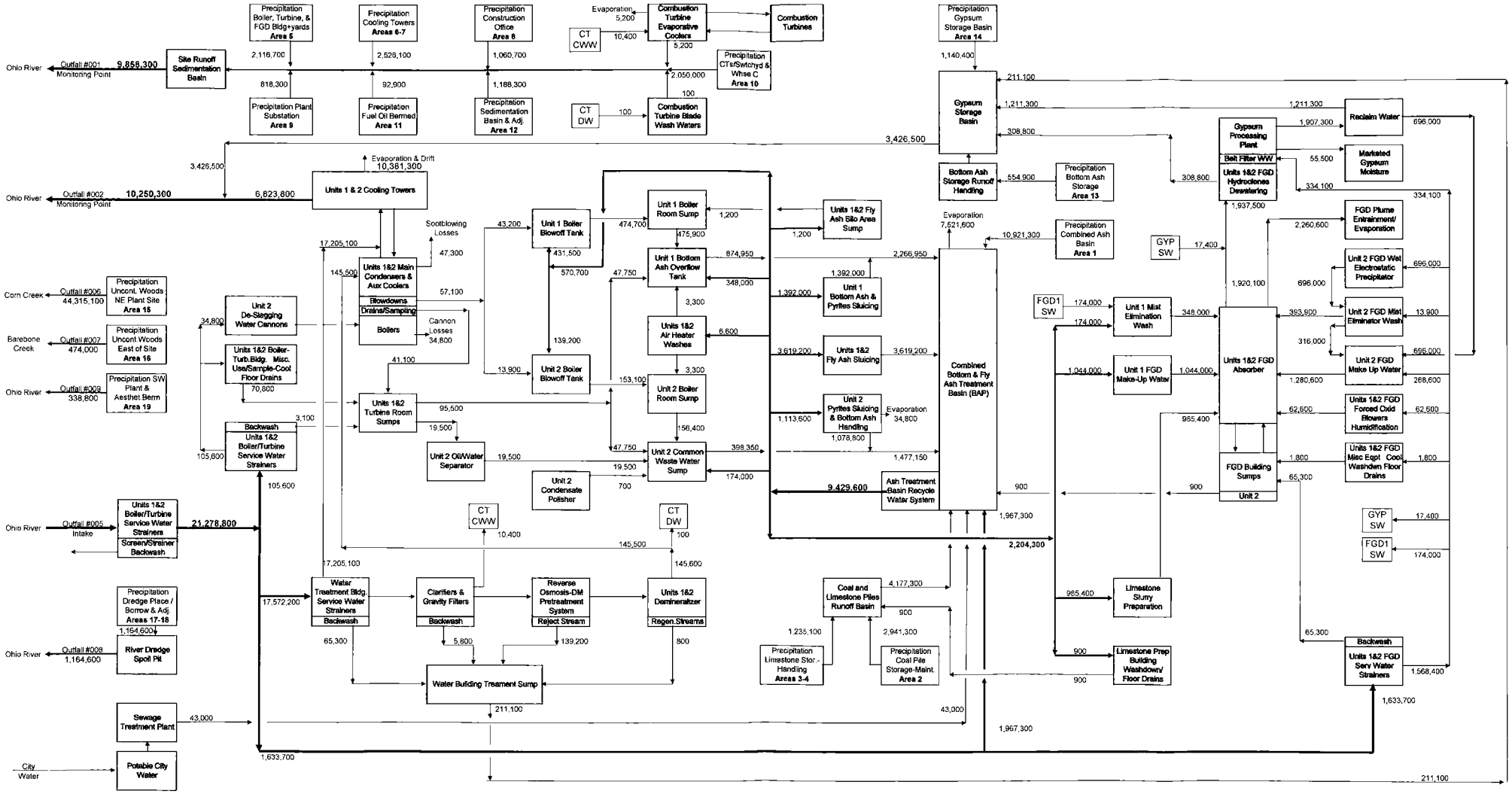

NOTES:
1. All Flows expressed in gallons per day
2. Diagram Flows Include PMAC Flows and Precipitation Runoff Flows Added
3. PMAC (Peak Monthly Average Conditions) Process Flows Are Representative of Monthly Conditions Calculated as a Daily Average = 28 days Average Operational Flows + 1 Day Maximum Flows + 1 Day Maintenance Flows

TRIMBLE COUNTY GENERATING STATION - KDPES WATER BALANCE DIAGRAM PEAK MONTHLY AVERAGE CONDITIONS (PMAC) - PROCESS FLOWS PMAC CONDITIONS + 1-DAY MAXIMUM RAINFALL RUNOFF FLOWS		PREPARED BY: RJM / WPP DATE: 4/09/2007 Revision 3	LG&E an e·on company	TRIMBLE COUNTY GENERATING STATION WATER BALANCE DIAGRAM PMAC PROCESS CONDITIONS AND 1-DAY MAXIMUM RAINFALL PERMIT NO. KY 0041971

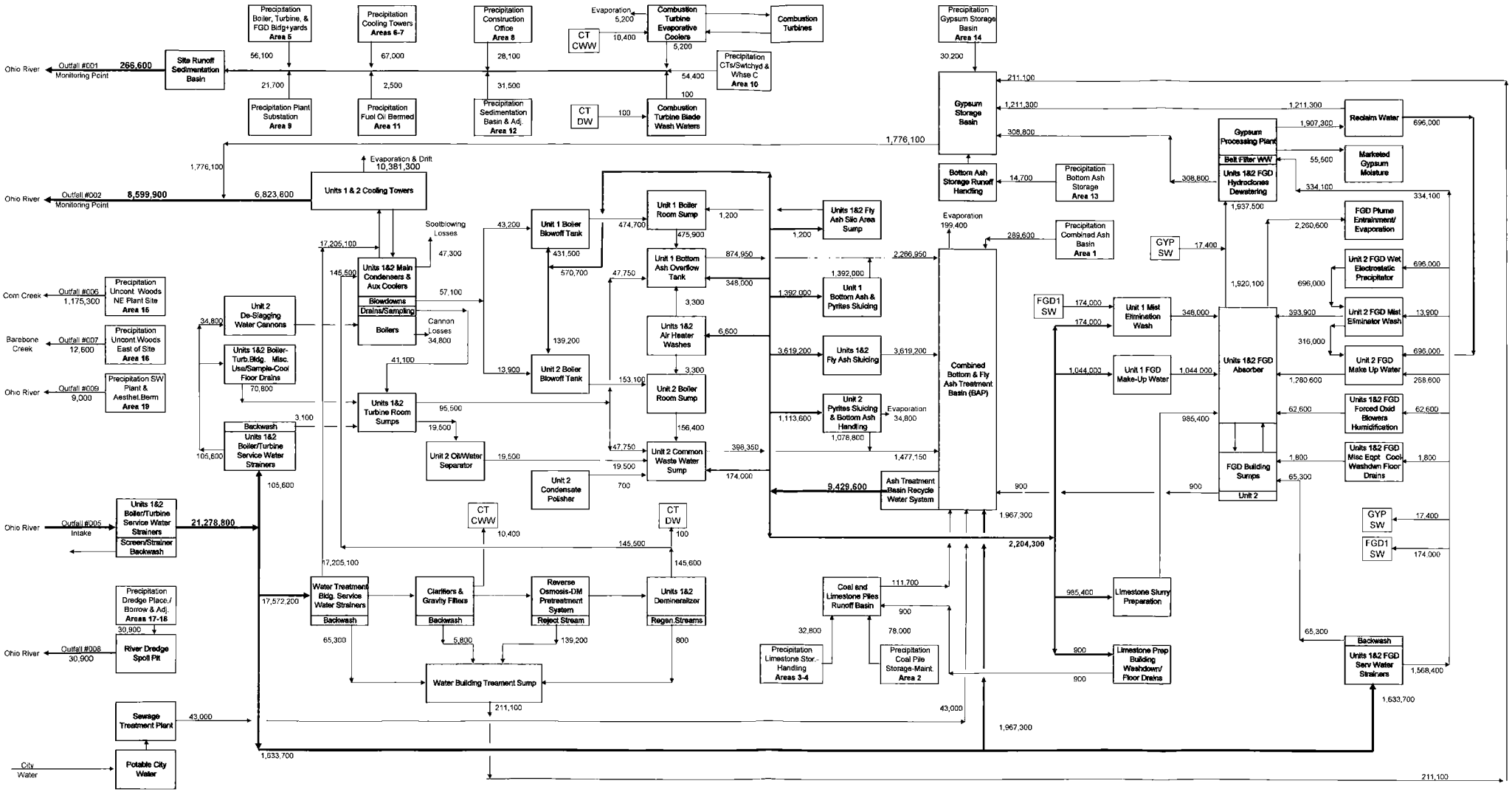

NOTES:
1. All Flows expressed in gallons per day
2. Diagram Flows Include PMAC Flows and Precipitation Runoff Flows Added
3. PMAC (Peak Monthly Average Conditions) Process Flows Are Representative of Monthly Conditions Calculated as a Daily Average = 28 days Average Operational Flows + 1 Day Maximum Flows + 1 Day Maintenance Flows

TRIMBLE COUNTY GENERATING STATION - KDPES WATER BALANCE DIAGRAM PEAK MONTHLY AVERAGE CONDITIONS (PMAC) - PROCESS FLOWS PMAC CONDITIONS + AVERAGE RAINFALL RUNOFF FLOWS		PREPARED BY: RJM / WPP DATE: 4/09/2007 Revision 3	LG&E an e·on company	TRIMBLE COUNTY GENERATING STATION WATER BALANCE DIAGRAM PMAC PROCESS CONDITIONS AND AVERAGE RAINFALL PERMIT NO. KY 0041971

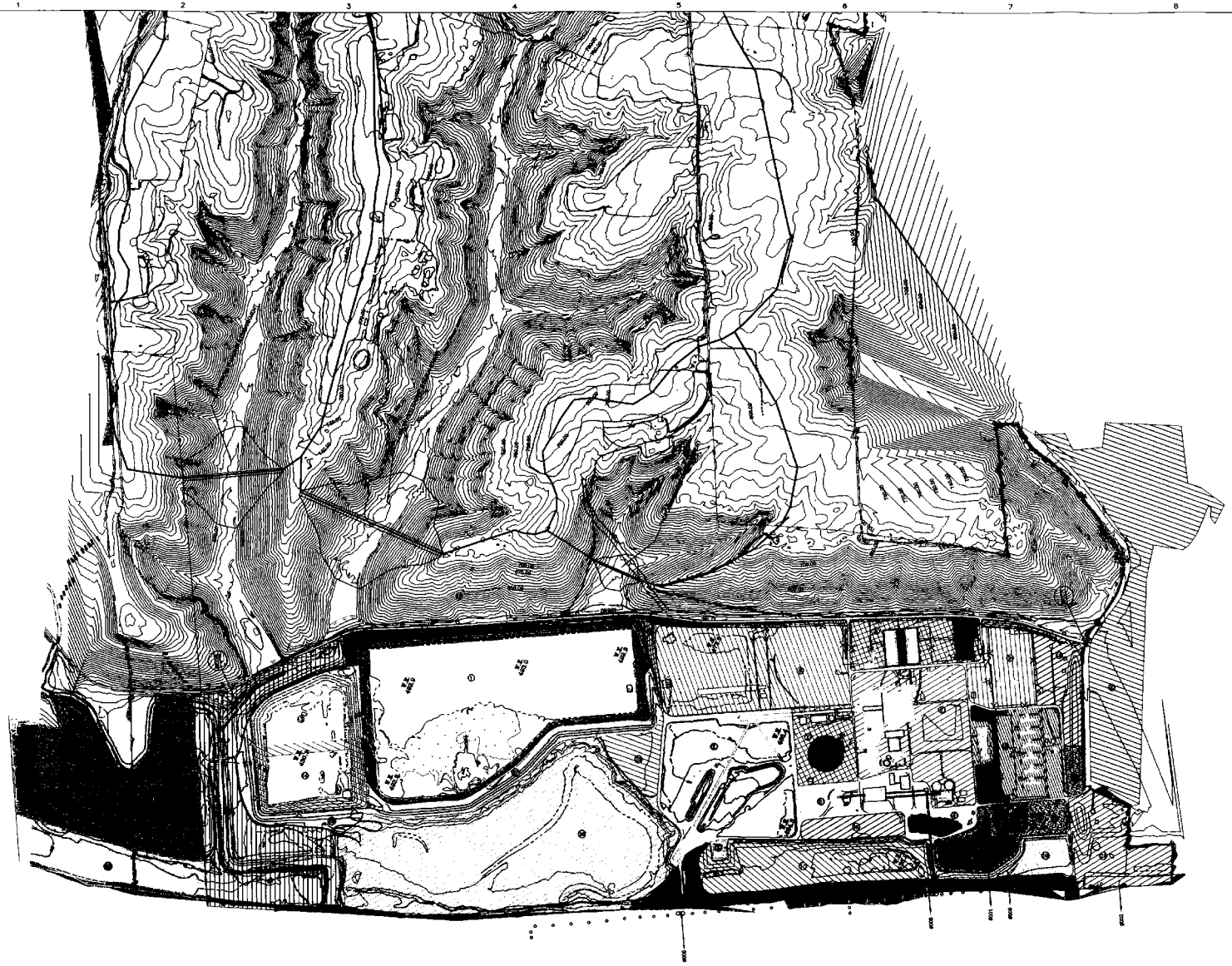

Revisions
MARCH 19, 2007 KPDES PERMIT RENEWAL SUBMISSION TO INCLUDE TC UNIT 6 CONSTRUCTION, BOTTOM ASH POND ELEVATION, GYPSUM IMPOUNDMENT AND BOTTOM ASH STORAGE AREAS (3/30/07 - VRP/EJM)

LG&E Generation Services
LOUISVILLE GAS & ELECTRIC COMPANY
PPL Company

MACTEC
2900 Bluegrass Corporate Drive, Ste 100
Louisville, KY 40299
Phone 502-[illegible]
Fax 502-[illegible]

Project: TRIMBLE COUNTY NPDES PERMIT APPLICATION 2007
PERMIT #KY0061071

Scale: GRAPHIC
Drawn: G.HAYS/S.DUNCAN
Approved: V.PUCKETT/R.WEIDNA
Engineer: Michael Gregoire
Project Manager: Michael Gregoire
Date: March 19, 2007
Revised: March 19, 2007
Drawing Number: TCS-C-02014

Approved Revision Date: MARCH 19, 2007
Drawing Name: NPDES PERMIT DRAWING.dwg

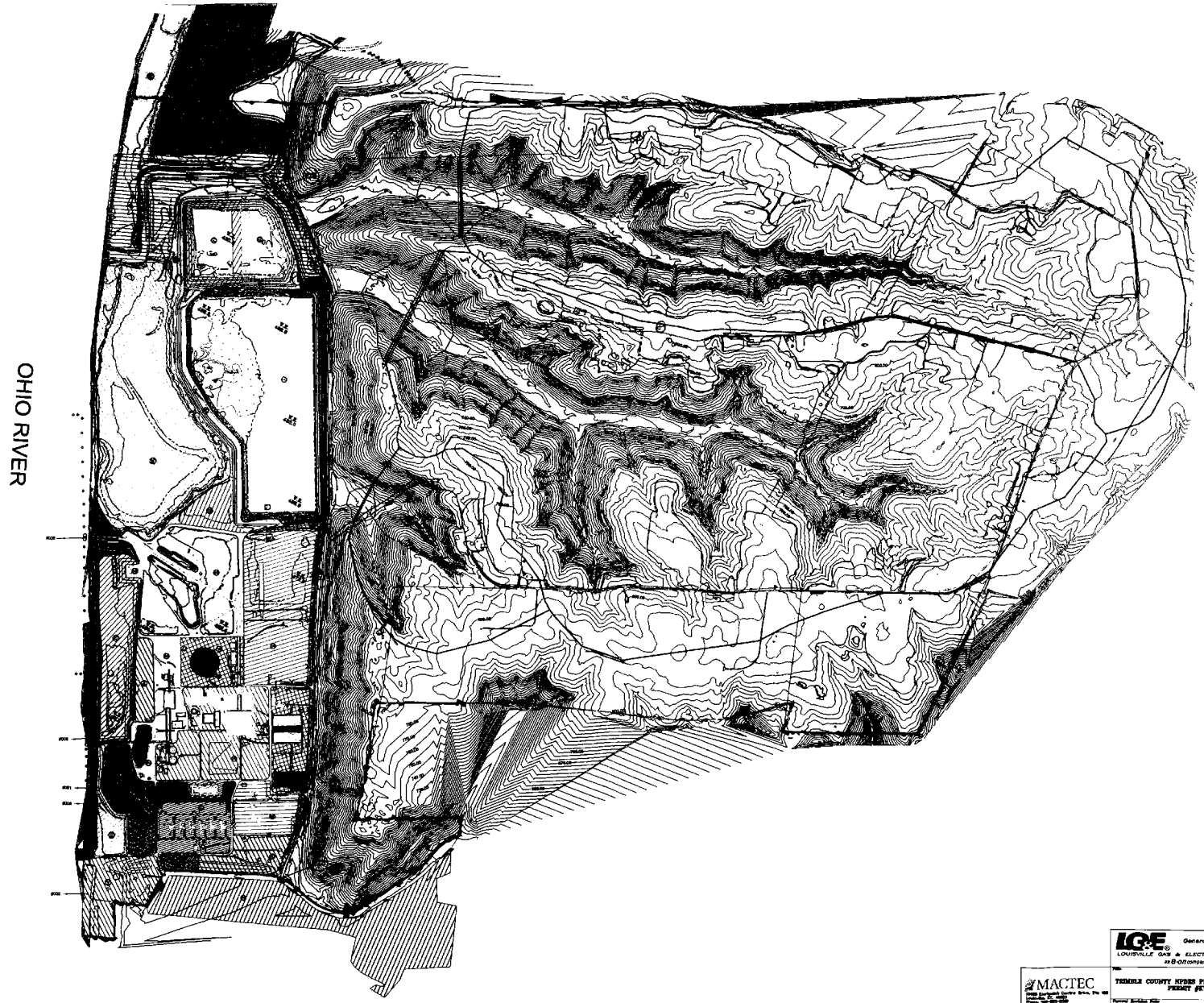

Revisions
MARCH 19, 2007 NPDES PERMIT RENEWAL SUBMISSION TO INCLUDE TC UNIT 2 CONSTRUCTION, BOTTOM ASH POND ELEVATION, GYPSUM IMPOUNDMENT AND BOTTOM ASH STORAGE AREAS (3/30/07 - VRP/RJM)

LG&E Generation Services
LOUISVILLE GAS & ELECTRIC COMPANY
a PPL Company

MACTEC

TRIMBLE COUNTY NPDES PERMIT APPLICATION 2007
PERMIT #KY0041971

Scale: GRAPHIC
Drawn: GJWYS/SJDUNCAN
Approved: W.PUCKETT/RMEDINA
Approved Drawings Originals
Original Plan Drawings
LG&E Reading 5/7/96
- WEST, SOUTHWEST, TECHNICAL SERVICE

Original Drawing Date: MARCH 19, 2007
Drawing Name: NPDES PERMIT DRAWING.dwg
Drawing Number: TCG-C-02003

Microbac

Microbac Laboratories, Inc.

KENTUCKY TESTING LABORATORY DIVISION
3323 Gilmore Industrial Blvd. Louisville, KY 40213 502.962.6400 Fax: 502.962.6411
Evansville, IN 812.464.9000 | Lexington, KY 859.276.3506 | Paducah, KY 270.898.3637

Member

Chemical, Biological, Physical, Molecular, and Toxicological Services

ELECTRONIC CERTIFICATE OF ANALYSIS

0701-01789

E. ON U.S. SERVICES INC.
LISA MARTIN
8815 HWY 42
GHENT, KY 41045

E.ON US PERMIT RENEWALS - TRIMBLE CO

Date Reported	02/14/2007
Date Due	02/12/2007
Date Received	01/29/2007
Date Sampled	01/29/2007
Invoice No.	97422
Customer #	6076
Customer P.O.	

Analysis	Qualif	Result	Unit	Method	Date	Tech
Sample: 001 001 - RUNOFF POND DISCHARGE					Date & Time Sampled: 1/29/2007 @ 11:45	
PH, FIELD		7.4	SU	EPA 150.1	01/29/2007	BJH
FLOW BY MEASUREMENT & CALC.		6.68	MGD	EPA 600	01/03/2007	BJH
TEMPERATURE		3	DEGREES C	EPA 170.1	01/29/2007	BJH
BOD, CARBONACEOUS		<2	MG/L	SM 5210B	01/31/2007	LER
SOLIDS, TOTAL SUSPENDED		<5	MG/L	EPA 160.2	02/02/2007	KGY
NITROGEN, AMMONIA		0.32	MG/L	EPA 350.1	01/31/2007	LRL
COD		<10	MG/L	EPA 410.4	01/31/2007	DRR
TOTAL ORGANIC CARBON		3.1	MG/L	SM 5310C	02/07/2007	CAM
OIL AND GREASE, TOTAL		<5	MG/L	EPA 1664A	01/30/2007	JRV
PHOSPHORUS, TOTAL	M1	0.065	MG/L	EPA 365.1	01/31/2007	JPM
NITROGEN, TOTAL KJELDAHL		1.8	MG/L	EPA 351.3	02/05/2007	JPM
CYANIDE, TOTAL		<0.01	MG/L	EPA 335.4	02/06/2007	JPM
SULFIDE		<0.05	MG/L	EPA 376.2	01/31/2007	JFK
SULFITE		<2	MG/L	EPA 377.1	01/29/2007	DRR
BROMIDE	E1	<2.5	MG/L	EPA 300.0	01/30/2007	JPM
[Color, ADMI]					01/30/2007	VAS
COLOR, ADMI		16	ADMI	EPA 110.1	01/30/2007	VAS
COLOR, ADMI @ PH 7.6		14	ADMI	EPA 110.1	01/30/2007	VAS
TIME OF ANALYSIS, COLOR		1100	HOURS		01/30/2007	VAS
SURFACTANTS, MBAS		<0.2	MG/L	EPA 425.1	01/30/2007	DJW
COLIFORM, FECAL		<10	PER 100ML	SM 9222D	01/29/2007	CJL
[IC SCAN]				EPA 300.0	01/30/2007	JPM
CHLORIDE		27	MG/L	EPA 300.0	01/30/2007	JPM
FLUORIDE	E1	<2.5	MG/L	EPA 300.0	01/30/2007	JPM
SULFATE		140	MG/L	EPA 300.0	02/01/2007	JPM
NITROGEN, NITRATE	E1	<0.55	MG/L	EPA 300.0	01/30/2007	JPM
NITROGEN, NITRITE	E1	<0.75	MG/L	EPA 300.0	01/30/2007	JPM
[Hardness Pkg. By ICP]					02/05/2007	MSR
CALCIUM		67	MG/L	EPA 200.7	02/05/2007	MSR
MAGNESIUM		19.1	MG/L	EPA 200.7	02/05/2007	MSR
HARDNESS, TOTAL AS CaCO3		250	MG/L	SM 2340B	02/06/2007	MSR
ALUMINUM		<1.0	MG/L	EPA 200.7	02/05/2007	MSR
ANTIMONY		<0.010	MG/L	EPA 200.7	02/05/2007	MSR
ARSENIC		<0.01	MG/L	EPA 200.7	02/05/2007	MSR
BARIUM		0.022	MG/L	EPA 200.7	02/05/2007	MSR
BERYLLIUM		<0.010	MG/L	EPA 200.7	02/05/2007	MSR
BORON		1.7	MG/L	EPA 200.7	02/06/2007	MSR
CADMIUM		<0.010	MG/L	EPA 200.7	02/05/2007	MSR
CHROMIUM		0.028	MG/L	EPA 200.7	02/05/2007	MSR

Microbac

Microbac Laboratories, Inc.

KENTUCKY TESTING LABORATORY DIVISION
3323 Gilmore Industrial Blvd. Louisville, KY 40213 502.962.6400 Fax: 502.962.6411
Evansville, IN 812.464.9000 | Lexington, KY 859.276.3506 | Paducah, KY 270.898.3637

Member

Chemical, Biological, Physical, Molecular, and Toxicological Services

ELECTRONIC CERTIFICATE OF ANALYSIS

0701-01789

Date Reported	02/14/2007
Date Received	01/29/2007
Date Sampled	01/29/2007

E. ON U.S. SERVICES INC.
LISA MARTIN
E.ON US PERMIT RENEWALS - TRIMBLE CO

Analysis	Qualif	Result	Unit	Method	Date	Tech
Sample: 001 001 - RUNOFF POND DISCHARGE				Date & Time Sampled:	1/29/2007 @ 11:45	
COBALT		<0.010	MG/L	EPA 200.7	02/05/2007	MSR
COPPER		<0.010	MG/L	EPA 200.7	02/05/2007	MSR
IRON		0.345	MG/L	EPA 200.7	02/05/2007	MSR
LEAD		<0.010	MG/L	EPA 200.7	02/05/2007	MSR
MAGNESIUM		19.1	MG/L	EPA 200.7	02/05/2007	MSR
MANGANESE		0.06	MG/L	EPA 200.7	02/05/2007	MSR
MOLYBDENUM		<0.02	MG/L	EPA 200.7	02/05/2007	MSR
NICKEL		0.020	MG/L	EPA 200.7	02/05/2007	MSR
SELENIUM		<0.05	MG/L	EPA 200.7	02/05/2007	MSR
SILVER		<0.0100	MG/L	EPA 200.7	02/05/2007	MSR
THALLIUM		<0.050	MG/L	EPA 200.7	02/05/2007	MSR
TIN		<0.050	MG/L	EPA 200.7	02/05/2007	MSR
TITANIUM		<0.010	MG/L	EPA 200.7	02/05/2007	MSR
ZINC		0.019	MG/L	EPA 200.7	02/05/2007	MSR
PHENOLICS, TOT. RECOVERABLE		<0.05	MG/L	EPA 420.1	02/01/2007	LRL
MERCURY		8.61	NG/L	EPA 1631 E	02/02/2007	SIM
MERCURY, BLANK		<0.500	NG/L	EPA 1631 E	02/02/2007	SIM
[Volatile Organics]				EPA 624	01/30/2007	YFL
VINYL CHLORIDE		<0.002	MG/L		01/30/2007	YFL
CHLOROMETHANE		<0.005	MG/L		01/30/2007	YFL
BROMOMETHANE		<0.005	MG/L		01/30/2007	YFL
CHLOROETHANE		<0.005	MG/L		01/30/2007	YFL
TRICHLOROFLUOROMETHANE		<0.005	MG/L		01/30/2007	YFL
1,1-DICHLOROETHYLENE		<0.005	MG/L		01/30/2007	YFL
METHYLENE CHLORIDE		<0.01	MG/L		01/30/2007	YFL
ACROLEIN		<0.025	MG/L		01/30/2007	YFL
ACRYLONITRILE		<0.005	MG/L		01/30/2007	YFL
TRANS-1,2-DICHLOROETHYLENE		<0.005	MG/L		01/30/2007	YFL
1,1-DICHLOROETHANE		<0.005	MG/L		01/30/2007	YFL
CHLOROFORM		<0.005	MG/L		01/30/2007	YFL
1,1,1-TRICHLOROETHANE		<0.005	MG/L		01/30/2007	YFL
CARBON TETRACHLORIDE		<0.005	MG/L		01/30/2007	YFL
BENZENE		<0.005	MG/L		01/30/2007	YFL
1,2-DICHLOROETHANE		<0.005	MG/L		01/30/2007	YFL
TRICHLOROETHYLENE		<0.005	MG/L		01/30/2007	YFL
1,2-DICHLOROPROPANE		<0.005	MG/L		01/30/2007	YFL
DICHLOROBROMOMETHANE		<0.005	MG/L		01/30/2007	YFL
2-CHLOROETHYL VINYL ETHER		<0.005	MG/L		01/30/2007	YFL
CIS-1,3-DICHLOROPROPYLENE		<0.005	MG/L		01/30/2007	YFL
TOLUENE		<0.005	MG/L		01/30/2007	YFL
TRANS-1,3-DICHLOROPROPYLENE		<0.005	MG/L		01/30/2007	YFL
1,1,2-TRICHLOROETHANE		<0.005	MG/L		01/30/2007	YFL
DIBROMOCHLOROMETHANE		<0.005	MG/L		01/30/2007	YFL

Microbac

Microbac Laboratories, Inc.

KENTUCKY TESTING LABORATORY DIVISION
3323 Gilmore Industrial Blvd. Louisville, KY 40213 502.962.6400 Fax: 502.962.6411
Evansville, IN 812.464.9000 | Lexington, KY 859.276.3506 | Paducah, KY 270.898.3637

Member

Chemical, Biological, Physical, Molecular, and Toxicological Services

ELECTRONIC CERTIFICATE OF ANALYSIS

0701-01789

Date Reported	02/14/2007
Date Received	01/29/2007
Date Sampled	01/29/2007

E. ON U.S. SERVICES INC.
LISA MARTIN
E.ON US PERMIT RENEWALS - TRIMBLE CO

Analysis	Qualif	Result	Unit	Method	Date	Tech
Sample: 001 - 001 - RUNOFF POND DISCHARGE					Date & Time Sampled: 1/29/2007 @ 11:45	
TETRACHLOROETHYLENE		<0.005	MG/L		01/30/2007	YFL
CHLOROBENZENE		<0.005	MG/L		01/30/2007	YFL
ETHYLBENZENE		<0.005	MG/L		01/30/2007	YFL
BROMOFORM		<0.005	MG/L		01/30/2007	YFL
1,1,2,2-TETRACHLOROETHANE		<0.005	MG/L		01/30/2007	YFL
1,3-DICHLOROBENZENE		<0.005	MG/L		01/30/2007	YFL
1,4-DICHLOROBENZENE		<0.005	MG/L		01/30/2007	YFL
1,2-DICHLOROBENZENE		<0.005	MG/L		01/30/2007	YFL
SR / DCA		95	%		01/30/2007	YFL
SR / TOL-D8		105	%		01/30/2007	YFL
SR / BFB		109	%		01/30/2007	YFL
SR / DBFM		97	%		01/30/2007	YFL
[Semi-Volatile Organics]				EPA 625	02/05/2007	JGF
N-NITROSODIMETHYLAMINE		<0.010	MG/L		02/05/2007	JGF
BIS(2-CHLOROETHYL)ETHER		<0.010	MG/L		02/05/2007	JGF
PHENOL		<0.010	MG/L		02/05/2007	JGF
2-CHLOROPHENOL		<0.010	MG/L		02/05/2007	JGF
1,3-DICHLOROBENZENE		<0.010	MG/L		02/05/2007	JGF
1,4-DICHLOROBENZENE		<0.010	MG/L		02/05/2007	JGF
1,2-DICHLOROBENZENE		<0.010	MG/L		02/05/2007	JGF
BIS(2-CHLOROISOPROPYL)ETHER		<0.010	MG/L		02/05/2007	JGF
HEXACHLOROETHANE		<0.010	MG/L		02/05/2007	JGF
N-NITROSODI-N-PROPYLAMINE		<0.010	MG/L		02/05/2007	JGF
NITROBENZENE		<0.010	MG/L		02/05/2007	JGF
ISOPHORONE		<0.010	MG/L		02/05/2007	JGF
2-NITROPHENOL		<0.010	MG/L		02/05/2007	JGF
2,4-DIMETHYLPHENOL		<0.010	MG/L		02/05/2007	JGF
BIS(2-CHLOROETHOXY)METHANE		<0.010	MG/L		02/05/2007	JGF
2,4-DICHLOROPHENOL		<0.010	MG/L		02/05/2007	JGF
1,2,4-TRICHLOROBENZENE		<0.010	MG/L		02/05/2007	JGF
NAPHTHALENE		<0.010	MG/L		02/05/2007	JGF
HEXACHLOROBUTADIENE		<0.010	MG/L		02/05/2007	JGF
4-CHLORO-3-METHYLPHENOL		<0.010	MG/L		02/05/2007	JGF
HEXACHLOROCYCLOPENTADIENE		<0.010	MG/L		02/05/2007	JGF
2,4,6-TRICHLOROPHENOL		<0.010	MG/L		02/05/2007	JGF
2-CHLORONAPHTHALENE		<0.010	MG/L		02/05/2007	JGF
DIMETHYL PHTHALATE		<0.010	MG/L		02/05/2007	JGF
ACENAPHTHYLENE		<0.010	MG/L		02/05/2007	JGF
2,6-DINITROTOLUENE		<0.010	MG/L		02/05/2007	JGF
ACENAPHTHENE		<0.010	MG/L		02/05/2007	JGF
2,4-DINITROPHENOL		<0.010	MG/L		02/05/2007	JGF
4-NITROPHENOL		<0.010	MG/L		02/05/2007	JGF
2,4-DINITROTOLUENE		<0.010	MG/L		02/05/2007	JGF

Microbac

Microbac Laboratories, Inc.

KENTUCKY TESTING LABORATORY DIVISION
3323 Gilmore Industrial Blvd. Louisville, KY 40213 502.962.6400 Fax: 502.962.6411
Evansville, IN 812.464.9000 | Lexington, KY 859.276.3506 | Paducah, KY 270.898.3637

Member

Chemical, Biological, Physical, Molecular, and Toxicological Services

ELECTRONIC CERTIFICATE OF ANALYSIS

0701-01789

Date Reported	02/14/2007
Date Received	01/29/2007
Date Sampled	01/29/2007

E. ON U.S. SERVICES INC.
LISA MARTIN
E.ON US PERMIT RENEWALS - TRIMBLE CO

Analysis	Qualif	Result	Unit	Method	Date	Tech
Sample: 001 001 - RUNOFF POND DISCHARGE					Date & Time Sampled: 1/29/2007 @ 11:45	
FLUORENE		<0.010	MG/L		02/05/2007	JGF
DIETHYL PHTHALATE		<0.010	MG/L		02/05/2007	JGF
4-CHLOROPHENYL PHENYL ETHER		<0.010	MG/L		02/05/2007	JGF
2-METHYL-4,6-DINITROPHENOL		<0.010	MG/L		02/05/2007	JGF
N-NITROSO-DIPHENYLAMINE		<0.010	MG/L		02/05/2007	JGF
4-BROMOPHENYL PHENYL ETHER		<0.010	MG/L		02/05/2007	JGF
HEXACHLOROBENZENE		<0.010	MG/L		02/05/2007	JGF
PENTACHLOROPHENOL		<0.010	MG/L		02/05/2007	JGF
ANTHRACENE		<0.010	MG/L		02/05/2007	JGF
PHENANTHRENE		<0.010	MG/L		02/05/2007	JGF
DI-N-BUTYL PHTHALATE		<0.010	MG/L		02/05/2007	JGF
FLUORANTHENE		<0.010	MG/L		02/05/2007	JGF
BENZIDINE		<0.010	MG/L		02/05/2007	JGF
PYRENE		<0.010	MG/L		02/05/2007	JGF
BENZYL BUTYL PHTHALATE		<0.010	MG/L		02/05/2007	JGF
BENZO(A)ANTHRACENE		<0.010	MG/L		02/05/2007	JGF
3,3'-DICHLOROBENZIDINE		<0.010	MG/L		02/05/2007	JGF
BIS(2-ETHYLHEXYL)PHTHALATE		<0.010	MG/L		02/05/2007	JGF
CHRYSENE		<0.010	MG/L		02/05/2007	JGF
DI-N-OCTYL PHTHALATE		<0.010	MG/L		02/05/2007	JGF
BENZO(B)FLUORANTHENE		<0.010	MG/L		02/05/2007	JGF
BENZO(K)FLUORANTHENE		<0.010	MG/L		02/05/2007	JGF
BENZO(A)PYRENE		<0.010	MG/L		02/05/2007	JGF
INDENO(1,2,3-C,D)PYRENE		<0.010	MG/L		02/05/2007	JGF
DIBENZO(A,H)ANTHRACENE		<0.010	MG/L		02/05/2007	JGF
BENZO(G,H,I)PERYLENE		<0.010	MG/L		02/05/2007	JGF
[Surrogate Rec. - B/N]					02/05/2007	JGF
SR / NITROBENZENE-D5		56.9	%		02/05/2007	JGF
SR / 2-FLUOROBIPHENYL		49.4	%		02/05/2007	JGF
SR / P-TERPHENYL		44.8	%		02/05/2007	JGF
[Surrogate Rec. - Acids]					02/05/2007	JGF
SR / 2-FLUOROPHENOL		23.9	%		02/05/2007	JGF
SR / PHENOL-D6		15.0	%		02/05/2007	JGF
SR / 2,4,6-TRIBROMOPHENOL		52.4	%		02/05/2007	JGF
DATE EXTRACTED SVOC - 625		COMPLETED		EPA 625 - EXT	02/02/2007	DJW
TIME OF ANALYSIS, CBOD		900	HOURS	SM 5210B	01/31/2007	LER
TIME OF ANALYSIS, MBAS		090	HOURS	EPA 425.1	01/30/2007	DJW
TIME OF ANALYSIS, FECAL		1550	HOURS	SM 9222D/9221E	01/29/2007	CJL
TIME OF ANALYSIS, NITRATE		1600	HOURS	EPA 300.0	01/30/2007	JPM

Sample: 002 002 - COOLING TOWER BLOWDOWN Date & Time Sampled: 1/29/2007 @ 12:15

Microbac

Microbac Laboratories, Inc.

KENTUCKY TESTING LABORATORY DIVISION
3323 Gilmore Industrial Blvd. Louisville, KY 40213 502.962.6400 Fax: 502.962.6411
Evansville, IN 812.464.9000 | Lexington, KY 859.276.3506 | Paducah, KY 270.898.3637

Member

Chemical, Biological, Physical, Molecular, and Toxicological Services

ELECTRONIC CERTIFICATE OF ANALYSIS

0701-01789

Date Reported	02/14/2007
Date Received	01/29/2007
Date Sampled	01/29/2007

E. ON U.S. SERVICES INC.
LISA MARTIN
E.ON US PERMIT RENEWALS - TRIMBLE CO

Analysis	Qualif	Result	Unit	Method	Date	Tech
Sample: 002 : 002 - COOLING TOWER BLOWDOWN					Date & Time Sampled: 1/29/2007 @ 12:15	
PH, FIELD		8.60	SU	EPA 150.1	01/29/2007	BJH
FLOW BY MEASUREMENT & CALC.		1.77	MGD	EPA 600	01/29/2007	BJH
TEMPERATURE		25	DEGREES C	EPA 170.1	01/29/2007	BJH
BOD, CARBONACEOUS		2	MG/L	SM 5210B	01/31/2007	LER
SOLIDS, TOTAL SUSPENDED		360	MG/L	EPA 160.2	02/02/2007	KGY
NITROGEN, AMMONIA		0.11	MG/L	EPA 350.1	01/31/2007	LRL
COD		36	MG/L	EPA 410.4	01/31/2007	DRR
TOTAL ORGANIC CARBON		7.8	MG/L	SM 5310C	02/07/2007	CAM
OIL AND GREASE, TOTAL		<5	MG/L	EPA 1664A	01/30/2007	JRV
PHOSPHORUS, TOTAL		1.8	MG/L	EPA 365.1	01/31/2007	JPM
NITROGEN, TOTAL KJELDAHL		3.2	MG/L	EPA 351.3	02/05/2007	JPM
CYANIDE, TOTAL		<0.01	MG/L	EPA 335.4	02/06/2007	JPM
SULFIDE		<0.05	MG/L	EPA 376.2	01/31/2007	JFK
SULFITE		<2	MG/L	EPA 377.1	01/29/2007	DRR
BROMIDE	E1	<2.5	MG/L	EPA 300.0	01/30/2007	JPM
[Color, ADMI]					01/30/2007	VAS
COLOR, ADMI		31	ADMI	EPA 110.1	01/30/2007	VAS
COLOR, ADMI @ PH 7.6		26	ADMI	EPA 110.1	01/30/2007	VAS
TIME OF ANALYSIS, COLOR		1100	HOURS		01/30/2007	VAS
SURFACTANTS, MBAS		<0.2	MG/L	EPA 425.1	01/30/2007	DJW
COLIFORM, FECAL		10	PER 100ML	SM 9222D	01/29/2007	CJL
[IC SCAN]				EPA 300.0	01/30/2007	JPM
CHLORIDE		52	MG/L	EPA 300.0	01/30/2007	JPM
FLUORIDE	E1	<2.5	MG/L	EPA 300.0	01/30/2007	JPM
SULFATE		240	MG/L	EPA 300.0	02/01/2007	JPM
NITROGEN, NITRATE		4.3	MG/L	EPA 300.0	01/30/2007	JPM
NITROGEN, NITRITE	E1	<0.75	MG/L	EPA 300.0	01/30/2007	JPM
[Hardness Pkg. By ICP]					02/06/2007	MSR
CALCIUM		133	MG/L	EPA 200.7	02/06/2007	MSR
MAGNESIUM		37.7	MG/L	EPA 200.7	02/05/2007	MSR
HARDNESS, TOTAL AS CaCO3		490	MG/L	SM 2340B	02/06/2007	MSR
ALUMINUM		12.4	MG/L	EPA 200.7	02/05/2007	MSR
ANTIMONY		<0.010	MG/L	EPA 200.7	02/05/2007	MSR
ARSENIC		<0.01	MG/L	EPA 200.7	02/05/2007	MSR
BARIUM		0.208	MG/L	EPA 200.7	02/05/2007	MSR
BERYLLIUM		<0.010	MG/L	EPA 200.7	02/05/2007	MSR
BORON		<0.5	MG/L	EPA 200.7	02/06/2007	MSR
CADMIUM		<0.010	MG/L	EPA 200.7	02/05/2007	MSR
CHROMIUM		0.059	MG/L	EPA 200.7	02/05/2007	MSR
COBALT		<0.010	MG/L	EPA 200.7	02/05/2007	MSR
COPPER		0.050	MG/L	EPA 200.7	02/05/2007	MSR
IRON		16.5	MG/L	EPA 200.7	02/05/2007	MSR
LEAD		0.017	MG/L	EPA 200.7	02/05/2007	MSR

Microbac

Microbac Laboratories, Inc.

KENTUCKY TESTING LABORATORY DIVISION
3323 Gilmore Industrial Blvd. Louisville, KY 40213 502.962.6400 Fax: 502.962.6411
Evansville, IN 812.464.9000 | Lexington, KY 859.276.3506 | Paducah, KY 270.898.3637

Member

Chemical, Biological, Physical, Molecular, and Toxicological Services

ELECTRONIC CERTIFICATE OF ANALYSIS

0701-01789

Date Reported	02/14/2007
Date Received	01/29/2007
Date Sampled	01/29/2007

E. ON U.S. SERVICES INC.
LISA MARTIN
E.ON US PERMIT RENEWALS - TRIMBLE CO

Analysis	Qualif	Result	Unit	Method	Date	Tech
Sample: 002 002 - COOLING TOWER BLOWDOWN				Date & Time Sampled:	1/29/2007 @	12:15
MAGNESIUM		37.7	MG/L	EPA 200.7	02/05/2007	MSR
MANGANESE		0.94	MG/L	EPA 200.7	02/05/2007	MSR
MOLYBDENUM		0.07	MG/L	EPA 200.7	02/05/2007	MSR
NICKEL		0.049	MG/L	EPA 200.7	02/05/2007	MSR
SELENIUM		<0.05	MG/L	EPA 200.7	02/05/2007	MSR
SILVER		<0.0100	MG/L	EPA 200.7	02/05/2007	MSR
THALLIUM		<0.050	MG/L	EPA 200.7	02/05/2007	MSR
TIN		<0.050	MG/L	EPA 200.7	02/05/2007	MSR
TITANIUM		0.177	MG/L	EPA 200.7	02/05/2007	MSR
ZINC		0.091	MG/L	EPA 200.7	02/05/2007	MSR
PHENOLICS, TOT. RECOVERABLE		<0.05	MG/L	EPA 420.1	02/01/2007	LRL
MERCURY		73.0	NG/L	EPA 1631 E	02/02/2007	SIM
MERCURY, BLANK		<0.500	NG/L	EPA 1631 E	02/02/2007	SIM
[Volatile Organics]				EPA 624	01/30/2007	YFL
VINYL CHLORIDE		<0.002	MG/L		01/30/2007	YFL
CHLOROMETHANE		<0.005	MG/L		01/30/2007	YFL
BROMOMETHANE		<0.005	MG/L		01/30/2007	YFL
CHLOROETHANE		<0.005	MG/L		01/30/2007	YFL
TRICHLOROFLUOROMETHANE		<0.005	MG/L		01/30/2007	YFL
1,1-DICHLOROETHYLENE		<0.005	MG/L		01/30/2007	YFL
METHYLENE CHLORIDE		<0.01	MG/L		01/30/2007	YFL
ACROLEIN		<0.025	MG/L		01/30/2007	YFL
ACRYLONITRILE		<0.005	MG/L		01/30/2007	YFL
TRANS-1,2-DICHLOROETHYLENE		<0.005	MG/L		01/30/2007	YFL
1,1-DICHLOROETHANE		<0.005	MG/L		01/30/2007	YFL
CHLOROFORM		<0.005	MG/L		01/30/2007	YFL
1,1,1-TRICHLOROETHANE		<0.005	MG/L		01/30/2007	YFL
CARBON TETRACHLORIDE		<0.005	MG/L		01/30/2007	YFL
BENZENE		<0.005	MG/L		01/30/2007	YFL
1,2-DICHLOROETHANE		<0.005	MG/L		01/30/2007	YFL
TRICHLOROETHYLENE		<0.005	MG/L		01/30/2007	YFL
1,2-DICHLOROPROPANE		<0.005	MG/L		01/30/2007	YFL
DICHLOROBROMOMETHANE		<0.005	MG/L		01/30/2007	YFL
2-CHLOROETHYL VINYL ETHER		<0.005	MG/L		01/30/2007	YFL
CIS-1,3-DICHLOROPROPYLENE		<0.005	MG/L		01/30/2007	YFL
TOLUENE		<0.005	MG/L		01/30/2007	YFL
TRANS-1,3-DICHLOROPROPYLENE		<0.005	MG/L		01/30/2007	YFL
1,1,2-TRICHLOROETHANE		<0.005	MG/L		01/30/2007	YFL
DIBROMOCHLOROMETHANE		<0.005	MG/L		01/30/2007	YFL
TETRACHLOROETHYLENE		<0.005	MG/L		01/30/2007	YFL
CHLOROBENZENE		<0.005	MG/L		01/30/2007	YFL
ETHYLBENZENE		<0.005	MG/L		01/30/2007	YFL
BROMOFORM		<0.005	MG/L		01/30/2007	YFL

Microbac

Microbac Laboratories, Inc.

KENTUCKY TESTING LABORATORY DIVISION
3323 Gilmore Industrial Blvd. Louisville, KY 40213 502.962.6400 Fax: 502.962.6411
Evansville, IN 812.464.9000 | Lexington, KY 859.276.3506 | Paducah, KY 270.898.3637

Member

Chemical, Biological, Physical, Molecular, and Toxicological Services

ELECTRONIC CERTIFICATE OF ANALYSIS

0701-01789

Date Reported	02/14/2007
Date Received	01/29/2007
Date Sampled	01/29/2007

E. ON U.S. SERVICES INC.
LISA MARTIN
E.ON US PERMIT RENEWALS - TRIMBLE CO

Analysis	Qualif	Result	Unit	Method	Date	Tech
Sample: 002 : 002 - COOLING TOWER BLOWDOWN					Date & Time Sampled: 1/29/2007 @ 12:15	
1,1,2,2-TETRACHLOROETHANE		<0.005	MG/L		01/30/2007	YFL
1,3-DICHLOROBENZENE		<0.005	MG/L		01/30/2007	YFL
1,4-DICHLOROBENZENE		<0.005	MG/L		01/30/2007	YFL
1,2-DICHLOROBENZENE		<0.005	MG/L		01/30/2007	YFL
SR / DCA		95	%		01/30/2007	YFL
SR / TOL-D8		102	%		01/30/2007	YFL
SR / BFB		108	%		01/30/2007	YFL
SR / DBFM		102	%		01/30/2007	YFL
[Semi-Volatile Organics]				EPA 625	02/05/2007	JGF
N-NITROSODIMETHYLAMINE		<0.010	MG/L		02/05/2007	JGF
BIS(2-CHLOROETHYL)ETHER		<0.010	MG/L		02/05/2007	JGF
PHENOL		<0.010	MG/L		02/05/2007	JGF
2-CHLOROPHENOL		<0.010	MG/L		02/05/2007	JGF
1,3-DICHLOROBENZENE		<0.010	MG/L		02/05/2007	JGF
1,4-DICHLOROBENZENE		<0.010	MG/L		02/05/2007	JGF
1,2-DICHLOROBENZENE		<0.010	MG/L		02/05/2007	JGF
BIS(2-CHLOROISOPROPYL)ETHER		<0.010	MG/L		02/05/2007	JGF
HEXACHLOROETHANE		<0.010	MG/L		02/05/2007	JGF
N-NITROSODI-N-PROPYLAMINE		<0.010	MG/L		02/05/2007	JGF
NITROBENZENE		<0.010	MG/L		02/05/2007	JGF
ISOPHORONE		<0.010	MG/L		02/05/2007	JGF
2-NITROPHENOL		<0.010	MG/L		02/05/2007	JGF
2,4-DIMETHYLPHENOL		<0.010	MG/L		02/05/2007	JGF
BIS(2-CHLOROETHOXY)METHANE		<0.010	MG/L		02/05/2007	JGF
2,4-DICHLOROPHENOL		<0.010	MG/L		02/05/2007	JGF
1,2,4-TRICHLOROBENZENE		<0.010	MG/L		02/05/2007	JGF
NAPHTHALENE		<0.010	MG/L		02/05/2007	JGF
HEXACHLOROBUTADIENE		<0.010	MG/L		02/05/2007	JGF
4-CHLORO-3-METHYLPHENOL		<0.010	MG/L		02/05/2007	JGF
HEXACHLOROCYCLOPENTADIENE		<0.010	MG/L		02/05/2007	JGF
2,4,6-TRICHLOROPHENOL		<0.010	MG/L		02/05/2007	JGF
2-CHLORONAPHTHALENE		<0.010	MG/L		02/05/2007	JGF
DIMETHYL PHTHALATE		<0.010	MG/L		02/05/2007	JGF
ACENAPHTHYLENE		<0.010	MG/L		02/05/2007	JGF
2,6-DINITROTOLUENE		<0.010	MG/L		02/05/2007	JGF
ACENAPHTHENE		<0.010	MG/L		02/05/2007	JGF
2,4-DINITROPHENOL		<0.010	MG/L		02/05/2007	JGF
4-NITROPHENOL		<0.010	MG/L		02/05/2007	JGF
2,4-DINITROTOLUENE		<0.010	MG/L		02/05/2007	JGF
FLUORENE		<0.010	MG/L		02/05/2007	JGF
DIETHYL PHTHALATE		<0.010	MG/L		02/05/2007	JGF
4-CHLOROPHENYL PHENYL ETHER		<0.010	MG/L		02/05/2007	JGF
2-METHYL-4,6-DINITROPHENOL		<0.010	MG/L		02/05/2007	JGF

Microbac

Microbac Laboratories, Inc.

KENTUCKY TESTING LABORATORY DIVISION
3323 Gilmore Industrial Blvd. Louisville, KY 40213 502.962.6400 Fax: 502.962.6411
Evansville, IN 812.464.9000 | Lexington, KY 859.276.3506 | Paducah, KY 270.898.3637

Member

Chemical, Biological, Physical, Molecular, and Toxicological Services

ELECTRONIC CERTIFICATE OF ANALYSIS

0701-01789

Date Reported	02/14/2007
Date Received	01/29/2007
Date Sampled	01/29/2007

E. ON U.S. SERVICES INC.
LISA MARTIN
E.ON US PERMIT RENEWALS - TRIMBLE CO

Analysis	Qualif	Result	Unit	Method	Date	Tech
Sample: 002 002 - COOLING TOWER BLOWDOWN					Date & Time Sampled: 1/29/2007 @ 12:15	
N-NITROSO-DIPHENYLAMINE		<0.010	MG/L		02/05/2007	JGF
4-BROMOPHENYL PHENYL ETHER		<0.010	MG/L		02/05/2007	JGF
HEXACHLOROBENZENE		<0.010	MG/L		02/05/2007	JGF
PENTACHLOROPHENOL		<0.010	MG/L		02/05/2007	JGF
ANTHRACENE		<0.010	MG/L		02/05/2007	JGF
PHENANTHRENE		<0.010	MG/L		02/05/2007	JGF
DI-N-BUTYL PHTHALATE		<0.010	MG/L		02/05/2007	JGF
FLUORANTHENE		<0.010	MG/L		02/05/2007	JGF
BENZIDINE		<0.010	MG/L		02/05/2007	JGF
PYRENE		<0.010	MG/L		02/05/2007	JGF
BENZYL BUTYL PHTHALATE		<0.010	MG/L		02/05/2007	JGF
BENZO(A)ANTHRACENE		<0.010	MG/L		02/05/2007	JGF
3,3'-DICHLOROBENZIDINE		<0.010	MG/L		02/05/2007	JGF
BIS(2-ETHYLHEXYL)PHTHALATE		<0.010	MG/L		02/05/2007	JGF
CHRYSENE		<0.010	MG/L		02/05/2007	JGF
DI-N-OCTYL PHTHALATE		<0.010	MG/L		02/05/2007	JGF
BENZO(B)FLUORANTHENE		<0.010	MG/L		02/05/2007	JGF
BENZO(K)FLUORANTHENE		<0.010	MG/L		02/05/2007	JGF
BENZO(A)PYRENE		<0.010	MG/L		02/05/2007	JGF
INDENO(1,2,3-C,D)PYRENE		<0.010	MG/L		02/05/2007	JGF
DIBENZO(A,H)ANTHRACENE		<0.010	MG/L		02/05/2007	JGF
BENZO(G,H,I)PERYLENE		<0.010	MG/L		02/05/2007	JGF
[Surrogate Rec. - B/N]					02/05/2007	JGF
SR / NITROBENZENE-D5		58.4	%		02/05/2007	JGF
SR / 2-FLUOROBIPHENYL		53.0	%		02/05/2007	JGF
SR / P-TERPHENYL		49.9	%		02/05/2007	JGF
[Surrogate Rec. - Acids]					02/05/2007	JGF
SR / 2-FLUOROPHENOL		25.8	%		02/05/2007	JGF
SR / PHENOL-D6		16.7	%		02/05/2007	JGF
SR / 2,4,6-TRIBROMOPHENOL		49.5	%		02/05/2007	JGF
DATE EXTRACTED SVOC - 625		COMPLETED		EPA 625 - EXT	02/02/2007	DJW
TIME OF ANALYSIS, CBOD		900	HOURS	SM 5210B	01/31/2007	LER
TIME OF ANALYSIS, MBAS		0900	HOURS	EPA 425.1	01/30/2007	DJW
TIME OF ANALYSIS, FECAL		1550	HOURS	SM 9222D/9221E	01/29/2007	CJL
TIME OF ANALYSIS, NITRATE		1600	HOURS	EPA 300.0	01/30/2007	JPM
Sample: 003 005 - PLANT INTAKE					Date & Time Sampled: 1/29/2007 @ 11:15	
PH, FIELD		7.63	SU	EPA 150.1	01/29/2007	BJH
FLOW BY MEASUREMENT & CALC.		0.29	MGD	EPA 600	01/29/2007	BJH
TEMPERATURE		4.9	DEGREES C	EPA 170.1	01/29/2007	BJH
BOD, CARBONACEOUS		<2	MG/L	SM 5210B	01/31/2007	LER

Microbac

Microbac Laboratories, Inc.

KENTUCKY TESTING LABORATORY DIVISION
3323 Gilmore Industrial Blvd. Louisville, KY 40213 502.962.6400 Fax: 502.962.6411
Evansville, IN 812.464.9000 | Lexington, KY 859.276.3506 | Paducah, KY 270.898.3637

Member

Chemical, Biological, Physical, Molecular, and Toxicological Services

ELECTRONIC CERTIFICATE OF ANALYSIS

0701-01789

Date Reported	02/14/2007
Date Received	01/29/2007
Date Sampled	01/29/2007

E. ON U.S. SERVICES INC.
LISA MARTIN
E.ON US PERMIT RENEWALS - TRIMBLE CO

Analysis	Qualif	Result	Unit	Method	Date	Tech
Sample: 003 005 - PLANT INTAKE					Date & Time Sampled: 1/29/2007 @ 11:15	
SOLIDS, TOTAL SUSPENDED		37	MG/L	EPA 160.2	01/30/2007	KGY
NITROGEN, AMMONIA		<0.10	MG/L	EPA 350.1	01/31/2007	LRL
COD		<10	MG/L	EPA 410.4	01/31/2007	DRR
TOTAL ORGANIC CARBON		2.4	MG/L	SM 5310B	02/07/2007	CAM
OIL AND GREASE, TOTAL		<5	MG/L	EPA 1664A	01/30/2007	JRV
PHOSPHORUS, TOTAL		0.11	MG/L	EPA 365.1	01/31/2007	JPM
NITROGEN, TOTAL KJELDAHL	M1	0.92	MG/L	EPA 351.3	02/05/2007	JPM
CYANIDE, TOTAL		<0.01	MG/L	EPA 335.4	02/06/2007	JPM
SULFIDE		<0.05	MG/L	EPA 376.2	01/31/2007	JFK
SULFITE		<2	MG/L	EPA 377.1	01/29/2007	DRR
BROMIDE	E1	<2.5	MG/L	EPA 300.0	01/30/2007	JPM
[Color, ADMI]					01/30/2007	VAS
COLOR, ADMI		12	ADMI	EPA 110.1	01/30/2007	VAS
COLOR, ADMI @ PH 7.6		13	ADMI	EPA 110.1	01/30/2007	VAS
TIME OF ANALYSIS, COLOR		1100	HOURS		01/30/2007	VAS
SURFACTANTS, MBAS		<0.2	MG/L	EPA 425.1	01/30/2007	DJW
COLIFORM, FECAL		20	PER 100ML	SM 9222D	01/29/2007	CJL
[IC SCAN]				EPA 300.0	01/30/2007	JPM
CHLORIDE		14	MG/L	EPA 300.0	01/30/2007	JPM
FLUORIDE	E1	<2.5	MG/L	EPA 300.0	01/30/2007	JPM
SULFATE		46	MG/L	EPA 300.0	01/30/2007	JPM
NITROGEN, NITRATE		1.0	MG/L	EPA 300.0	01/30/2007	JPM
NITROGEN, NITRITE	E1	<0.75	MG/L	EPA 300.0	01/30/2007	JPM
[Hardness Pkg. By ICP]					02/05/2007	MSR
CALCIUM		39.3	MG/L	EPA 200.7	02/05/2007	MSR
MAGNESIUM		11.1	MG/L	EPA 200.7	02/05/2007	MSR
HARDNESS, TOTAL AS CaCO3		140	MG/L	SM 2340B	02/06/2007	MSR
ALUMINUM		1.5	MG/L	EPA 200.7	02/05/2007	MSR
ANTIMONY		<0.010	MG/L	EPA 200.7	02/05/2007	MSR
ARSENIC		<0.01	MG/L	EPA 200.7	02/05/2007	MSR
BARIUM		0.044	MG/L	EPA 200.7	02/05/2007	MSR
BERYLLIUM		<0.010	MG/L	EPA 200.7	02/05/2007	MSR
BORON		<0.5	MG/L	EPA 200.7	02/06/2007	MSR
CADMIUM		<0.010	MG/L	EPA 200.7	02/05/2007	MSR
CHROMIUM		0.050	MG/L	EPA 200.7	02/05/2007	MSR
COBALT		<0.010	MG/L	EPA 200.7	02/05/2007	MSR
COPPER		<0.010	MG/L	EPA 200.7	02/05/2007	MSR
IRON		2.06	MG/L	EPA 200.7	02/05/2007	MSR
LEAD		<0.010	MG/L	EPA 200.7	02/05/2007	MSR
MAGNESIUM		11.1	MG/L	EPA 200.7	02/05/2007	MSR
MANGANESE		0.14	MG/L	EPA 200.7	02/05/2007	MSR
MOLYBDENUM		<0.02	MG/L	EPA 200.7	02/05/2007	MSR
NICKEL		0.021	MG/L	EPA 200.7	02/05/2007	MSR

Microbac

Microbac Laboratories, Inc.

KENTUCKY TESTING LABORATORY DIVISION
3323 Gilmore Industrial Blvd. Louisville, KY 40213 502.962.6400 Fax: 502.962.6411
Evansville, IN 812.464.9000 | Lexington, KY 859.276.3506 | Paducah, KY 270.898.3637

Member

Chemical, Biological, Physical, Molecular, and Toxicological Services

ELECTRONIC CERTIFICATE OF ANALYSIS

0701-01789

Date Reported	02/14/2007
Date Received	01/29/2007
Date Sampled	01/29/2007

E. ON U.S. SERVICES INC.
LISA MARTIN
E.ON US PERMIT RENEWALS - TRIMBLE CO

Analysis	Qualif	Result	Unit	Method	Date	Tech
Sample: 003 005 - PLANT INTAKE					Date & Time Sampled: 1/29/2007 @ 11:15	
SELENIUM		<0.05	MG/L	EPA 200.7	02/05/2007	MSR
SILVER		<0.0100	MG/L	EPA 200.7	02/05/2007	MSR
THALLIUM		<0.050	MG/L	EPA 200.7	02/05/2007	MSR
TIN		<0.050	MG/L	EPA 200.7	02/05/2007	MSR
TITANIUM		0.018	MG/L	EPA 200.7	02/05/2007	MSR
ZINC		0.014	MG/L	EPA 200.7	02/05/2007	MSR
PHENOLICS, TOT. RECOVERABLE		<0.05	MG/L	EPA 420.1	02/01/2007	LRL
MERCURY		7.77	NG/L	EPA 1631 E	02/02/2007	SIM
MERCURY, BLANK		<0.500	NG/L	EPA 1631 E	02/02/2007	SIM
[Volatile Organics]				EPA 624	01/30/2007	YFL
VINYL CHLORIDE		<0.002	MG/L		01/30/2007	YFL
CHLOROMETHANE		<0.005	MG/L		01/30/2007	YFL
BROMOMETHANE		<0.005	MG/L		01/30/2007	YFL
CHLOROETHANE		<0.005	MG/L		01/30/2007	YFL
TRICHLOROFLUOROMETHANE		<0.005	MG/L		01/30/2007	YFL
1,1-DICHLOROETHYLENE		<0.005	MG/L		01/30/2007	YFL
METHYLENE CHLORIDE		<0.01	MG/L		01/30/2007	YFL
ACROLEIN		<0.025	MG/L		01/30/2007	YFL
ACRYLONITRILE		<0.005	MG/L		01/30/2007	YFL
TRANS-1,2-DICHLOROETHYLENE		<0.005	MG/L		01/30/2007	YFL
1,1-DICHLOROETHANE		<0.005	MG/L		01/30/2007	YFL
CHLOROFORM		<0.005	MG/L		01/30/2007	YFL
1,1,1-TRICHLOROETHANE		<0.005	MG/L		01/30/2007	YFL
CARBON TETRACHLORIDE		<0.005	MG/L		01/30/2007	YFL
BENZENE		<0.005	MG/L		01/30/2007	YFL
1,2-DICHLOROETHANE		<0.005	MG/L		01/30/2007	YFL
TRICHLOROETHYLENE		<0.005	MG/L		01/30/2007	YFL
1,2-DICHLOROPROPANE		<0.005	MG/L		01/30/2007	YFL
DICHLOROBROMOMETHANE		<0.005	MG/L		01/30/2007	YFL
2-CHLOROETHYL VINYL ETHER		<0.005	MG/L		01/30/2007	YFL
CIS-1,3-DICHLOROPROPYLENE		<0.005	MG/L		01/30/2007	YFL
TOLUENE		<0.005	MG/L		01/30/2007	YFL
TRANS-1,3-DICHLOROPROPYLENE		<0.005	MG/L		01/30/2007	YFL
1,1,2-TRICHLOROETHANE		<0.005	MG/L		01/30/2007	YFL
DIBROMOCHLOROMETHANE		<0.005	MG/L		01/30/2007	YFL
TETRACHLOROETHYLENE		<0.005	MG/L		01/30/2007	YFL
CHLOROBENZENE		<0.005	MG/L		01/30/2007	YFL
ETHYLBENZENE		<0.005	MG/L		01/30/2007	YFL
BROMOFORM		<0.005	MG/L		01/30/2007	YFL
1,1,2,2-TETRACHLOROETHANE		<0.005	MG/L		01/30/2007	YFL
1,3-DICHLOROBENZENE		<0.005	MG/L		01/30/2007	YFL
1,4-DICHLOROBENZENE		<0.005	MG/L		01/30/2007	YFL
1,2-DICHLOROBENZENE		<0.005	MG/L		01/30/2007	YFL

Microbac

Microbac Laboratories, Inc.

KENTUCKY TESTING LABORATORY DIVISION
3323 Gilmore Industrial Blvd. Louisville, KY 40213 502.962.6400 Fax: 502.962.6411
Evansville, IN 812.464.9000 | Lexington, KY 859.276.3506 | Paducah, KY 270.898.3637

Member

Chemical, Biological, Physical, Molecular, and Toxicological Services

ELECTRONIC CERTIFICATE OF ANALYSIS

0701-01789

Date Reported	02/14/2007
Date Received	01/29/2007
Date Sampled	01/29/2007

E. ON U.S. SERVICES INC.
LISA MARTIN
E.ON US PERMIT RENEWALS - TRIMBLE CO

Analysis	Qualif	Result	Unit	Method	Date	Tech
Sample: 003 005 - PLANT INTAKE					Date & Time Sampled: 1/29/2007 @ 11:15	
SR / DCA		107	%		01/30/2007	YFL
SR / TOL-D8		95	%		01/30/2007	YFL
SR / BFB		103	%		01/30/2007	YFL
SR / DBFM		108	%		01/30/2007	YFL
[Semi-Volatile Organics]				EPA 625	02/05/2007	JGF
N-NITROSODIMETHYLAMINE		<0.010	MG/L		02/05/2007	JGF
BIS(2-CHLOROETHYL)ETHER		<0.010	MG/L		02/05/2007	JGF
PHENOL		<0.010	MG/L		02/05/2007	JGF
2-CHLOROPHENOL		<0.010	MG/L		02/05/2007	JGF
1,3-DICHLOROBENZENE		<0.010	MG/L		02/05/2007	JGF
1,4-DICHLOROBENZENE		<0.010	MG/L		02/05/2007	JGF
1,2-DICHLOROBENZENE		<0.010	MG/L		02/05/2007	JGF
BIS(2-CHLOROISOPROPYL)ETHER		<0.010	MG/L		02/05/2007	JGF
HEXACHLOROETHANE		<0.010	MG/L		02/05/2007	JGF
N-NITROSODI-N-PROPYLAMINE		<0.010	MG/L		02/05/2007	JGF
NITROBENZENE		<0.010	MG/L		02/05/2007	JGF
ISOPHORONE		<0.010	MG/L		02/05/2007	JGF
2-NITROPHENOL		<0.010	MG/L		02/05/2007	JGF
2,4-DIMETHYLPHENOL		<0.010	MG/L		02/05/2007	JGF
BIS(2-CHLOROETHOXY)METHANE		<0.010	MG/L		02/05/2007	JGF
2,4-DICHLOROPHENOL		<0.010	MG/L		02/05/2007	JGF
1,2,4-TRICHLOROBENZENE		<0.010	MG/L		02/05/2007	JGF
NAPHTHALENE		<0.010	MG/L		02/05/2007	JGF
HEXACHLOROBUTADIENE		<0.010	MG/L		02/05/2007	JGF
4-CHLORO-3-METHYLPHENOL		<0.010	MG/L		02/05/2007	JGF
HEXACHLOROCYCLOPENTADIENE		<0.010	MG/L		02/05/2007	JGF
2,4,6-TRICHLOROPHENOL		<0.010	MG/L		02/05/2007	JGF
2-CHLORONAPHTHALENE		<0.010	MG/L		02/05/2007	JGF
DIMETHYL PHTHALATE		<0.010	MG/L		02/05/2007	JGF
ACENAPHTHYLENE		<0.010	MG/L		02/05/2007	JGF
2,6-DINITROTOLUENE		<0.010	MG/L		02/05/2007	JGF
ACENAPHTHENE		<0.010	MG/L		02/05/2007	JGF
2,4-DINITROPHENOL		<0.010	MG/L		02/05/2007	JGF
4-NITROPHENOL		<0.010	MG/L		02/05/2007	JGF
2,4-DINITROTOLUENE		<0.010	MG/L		02/05/2007	JGF
FLUORENE		<0.010	MG/L		02/05/2007	JGF
DIETHYL PHTHALATE		<0.010	MG/L		02/05/2007	JGF
4-CHLOROPHENYL PHENYL ETHER		<0.010	MG/L		02/05/2007	JGF
2-METHYL-4,6-DINITROPHENOL		<0.010	MG/L		02/05/2007	JGF
N-NITROSO-DIPHENYLAMINE		<0.010	MG/L		02/05/2007	JGF
4-BROMOPHENYL PHENYL ETHER		<0.010	MG/L		02/05/2007	JGF
HEXACHLOROBENZENE		<0.010	MG/L		02/05/2007	JGF
PENTACHLOROPHENOL		<0.010	MG/L		02/05/2007	JGF

Microbac

Microbac Laboratories, Inc.

KENTUCKY TESTING LABORATORY DIVISION
3323 Gilmore Industrial Blvd. Louisville, KY 40213 502.962.6400 Fax: 502.962.6411
Evansville, IN 812.464.9000 | Lexington, KY 859.276.3506 | Paducah, KY 270.898.3637

Member

Chemical, Biological, Physical, Molecular, and Toxicological Services

ELECTRONIC CERTIFICATE OF ANALYSIS

0701-01789

Date Reported	02/14/2007
Date Received	01/29/2007
Date Sampled	01/29/2007

E. ON U.S. SERVICES INC.
LISA MARTIN
E.ON US PERMIT RENEWALS - TRIMBLE CO

Analysis	Qualif	Result	Unit	Method	Date	Tech
Sample: 003 005 - PLANT INTAKE					Date & Time Sampled: 1/29/2007 @ 11:15	
ANTHRACENE		<0.010	MG/L		02/05/2007	JGF
PHENANTHRENE		<0.010	MG/L		02/05/2007	JGF
DI-N-BUTYL PHTHALATE		<0.010	MG/L		02/05/2007	JGF
FLUORANTHENE		<0.010	MG/L		02/05/2007	JGF
BENZIDINE		<0.010	MG/L		02/05/2007	JGF
PYRENE		<0.010	MG/L		02/05/2007	JGF
BENZYL BUTYL PHTHALATE		<0.010	MG/L		02/05/2007	JGF
BENZO(A)ANTHRACENE		<0.010	MG/L		02/05/2007	JGF
3,3'-DICHLOROBENZIDINE		<0.010	MG/L		02/05/2007	JGF
BIS(2-ETHYLHEXYL)PHTHALATE		<0.010	MG/L		02/05/2007	JGF
CHRYSENE		<0.010	MG/L		02/05/2007	JGF
DI-N-OCTYL PHTHALATE		<0.010	MG/L		02/05/2007	JGF
BENZO(B)FLUORANTHENE		<0.010	MG/L		02/05/2007	JGF
BENZO(K)FLUORANTHENE		<0.010	MG/L		02/05/2007	JGF
BENZO(A)PYRENE		<0.010	MG/L		02/05/2007	JGF
INDENO(1,2,3-C,D)PYRENE		<0.010	MG/L		02/05/2007	JGF
DIBENZO(A,H)ANTHRACENE		<0.010	MG/L		02/05/2007	JGF
BENZO(G,H,I)PERYLENE		<0.010	MG/L		02/05/2007	JGF
[Surrogate Rec. - B/N]					02/05/2007	JGF
SR / NITROBENZENE-D5		63.4	%		02/05/2007	JGF
SR / 2-FLUOROBIPHENYL		54.0	%		02/05/2007	JGF
SR / P-TERPHENYL		54.4	%		02/05/2007	JGF
[Surrogate Rec. - Acids]					02/05/2007	JGF
SR / 2-FLUOROPHENOL		31.6	%		02/05/2007	JGF
SR / PHENOL-D6		17.8	%		02/05/2007	JGF
SR / 2,4,6-TRIBROMOPHENOL		55.6	%		02/05/2007	JGF
DATE EXTRACTED SVOC - 625		COMPLETED		EPA 625 - EXT	02/02/2007	DJW
TIME OF ANALYSIS, CBOD		900	HOURS	SM 5210B	01/31/2007	LER
TIME OF ANALYSIS, MBAS		0900	HOURS	EPA 425.1	01/30/2007	DJW
TIME OF ANALYSIS, FECAL		1550	HOURS	SM 9222D/9221E	01/29/2007	CJL
TIME OF ANALYSIS, NITRATE		1600	HOURS	EPA 300.0	01/30/2007	JPM

Microbac

Microbac Laboratories, Inc.

KENTUCKY TESTING LABORATORY DIVISION
3323 Gilmore Industrial Blvd. Louisville, KY 40213 502.962.6400 Fax: 502.962.6411
Evansville, IN 812.464.9000 | Lexington, KY 859.276.3506 | Paducah, KY 270.898.3637

Member

Chemical, Biological, Physical, Molecular, and Toxicological Services

ELECTRONIC CERTIFICATE OF ANALYSIS

0701-01789

Date Reported	**02/14/2007**
Date Received	**01/29/2007**
Date Sampled	**01/29/2007**

E. ON U.S. SERVICES INC.
LISA MARTIN
E.ON US PERMIT RENEWALS - TRIMBLE CO

Analysis	Qualif	Result	Unit	Method	Date	Tech

RESPECTFULLY SUBMITTED: _____

MICROBAC LABORATORIES, INC.

For any feedback concerning our services, please contact Sean Hyde, the Managing Director at 502.962.6400, or Trevor Boyce, President, at tboyce@microbac.com or Robert Morgan, Chief Operating Officer, at rmorgan@microbac.com.

QUALIFIER DEFINITIONS:

AR	Results reported on an as received basis.
B1	Analyte value in the method blank above control limit.
B2	Analyte value in the method blank is between the method detection limit and the reporting detection limit.
C1	Continuing calibration verification (CCV) above upper control limit, analyte(s) not detected.
D1	Surrogate recoveries not calculated due to necessary sample dilution.
DW	Results reported on a dry weight basis.
E1	Elevated reporting or detection limit(s) due to sample matrix interference and sample dilution.
E2	Elevated reporting or detection limit(s) due to high analyte concentration and sample dilution.
E3	Elevated reporting or detection limit(s) due to insufficient sample volume
F1	Test Method Epa 1010 Not Valid For Solid Samples. Samples Analyzed By A Modified 1010 Method.
F2	No Flash Observed; Test Flame Is Being Extinguished By Sample At The Reported Temperature.
H1	Sample received outside of holding time for these analytes.
H2	Analyte was prepared and/or analyzed outside of the analytical method holding time.
J1	The analyte was positively identified; analyte was detected between the reporting limit and method detection limit and the result is an estimated value.
J2	The analyte was positively identified;the result is above the quantitation range and is an estimated value.
L1	Lab control sample (LCS) recovery below lower control limit, all other batch QC acceptable.
L2	Lab control sample (LCS) recovery above upper control limit, all other batch QC acceptable.
L3	Lab control sample (LCS) recovery above upper control limit, analyte not detected.
M1	Matrix spike recovery outside control limits due to sample matrix interference or high analyte concentration.
MC	Miscellaneous (see conclusion statement)
N	The analysis indicates the presence of an analyte for which there is presumptive evidence to make a "tentative identification."
ND	Not detected at or below the reporting limit (or method detection limit, if listed).
NJ	The analysis indicates the presence of an analyte that has been "tentatively identified" and is an estimated value.
OUT	The above value, over the specification limit, was verified by a second analysis.
P1	Sample received was improperly preserved for these analytes.
P2	Sample pH greater than method limit of 2.
R	The sample results are rejected due to serious deficiencies in the ability to analyze the sample and meet quality control criteria. the presence or absence of the analyte cannot be verified.
R1	Relative percent difference (RPD) of matrix spike duplicates outside of control limit.
R2	Relative percent difference (RPD) of LCS duplicates outside of control limit.
R3	Relative percent difference (RPD) of sample duplicates outside of control limit.
S1	One or more surrogates outside control limits, no target analytes detected.
S2	One or more surrogates outside control limits due to matrix interference.
S3	One or more surrogates outside control limits. the data was accepted based on the valid recovery of remaining surrogate(s).
SUB	Analysis subcontracted.
U	Analyte was analyzed for, but was not detected above the reported sample quantitation limit.
UJ	Analyte was not detected above the reporting limit, however, the reporting limit is approximate & may or may not represent the actual limit of quantitation necessary to accurately & precisely measure the analyte in the sample.

Chain of Custody Record

Microbac Laboratories, Inc.
Kentucky Testing Laboratory Division
3323 Gilmore Industrial Blvd., Louisville, KY 4021:
(502) 962-6400 fax (502) 962-6411

Certificate of Analysis No.
701 - 1789

Company: E. ON U. S. / Trimble Co Address: Attn: Roger Medina Ed Raker Phone: 502-627-2997 502-347-4187 email: roger.medina@eon-us.com	**Microbac Information:** Template Name: BID4321	On-site contact: [redacted] Friebert 502-627-6204

Permit #		Frequency One Time Event	Project Reference: Permit Renewal / Tyrone	Sampler (signature):

Sample ID	Sample Description	Collected Date	Collected Time	Analysis Requested	Grab/ Comp.	No. of Cont.	Cont. Type	Preservative
	001-Runoff Pond Discharge	12 9.7	11:45	BOD, ADMI, MBAS, SULFITE	Grab	1	P	None, <4.0 Deg C
				BROMIDE, TSS, CL, F, NO2, NO3, SO4	Grab	1	P	None, <4.0 Deg C
				NH3, PHOS-T, COD, N-T	Grab	2	P	H2SO4, pH <2
				Fecal Coliform	Grab	1	P	Sodium Thiosulfate
				OG-T	Grab	1	G	H2SO4, pH <2
				CN-T	Grab	1	P	NaOH
				SULFIDE	Grab	1	P	NaOH/Zn Acetate
				HARDNESS-T	Grab	1	P	HNO3, pH <2
				Al, Ba, B, Co, Fe, Mg, Mo, Mn, Sb, As, Be, Cd	Grab	1	P	HNO3, pH <2
				Cr, Cu, Pb, Ni, Se, Ag, Tl, Ti, Sn, & Zn-T	Grab		P	HNO3, pH <2
				TOC, PHENOL	Grab	2	G	H2SO4, pH <2
				VOLATILE ORGANICS	Grab	3	G	HCL, Ph<2
				SEMI-VOLATILE ORGANICS	Grab	2	G	None, <4.0 Deg C
				MERCURY EPA 1631	Grab	2	G	None, <4.0 Deg C

Received By: [signature]	Date/Time: 1-29-7
Relinquished By: [signature]	Date/Time: 1-29-7 1454
Received at Lab By: [signature]	Date/Time: 1-29-07 1454

Field Parameters:
pH: 7.4 **Temperature:** 3 C **Flow:** 6.69 MGD (Jan. 3, 2007)
Field Limits: **Type of Flow:**

Chain of Custody Record

Microbac Laboratories, Inc.
Kentucky Testing Laboratory Division
3323 Gilmore Industrial Blvd., Louisville, KY 4021:
(502) 962-6400 fax (502) 962-6411

Certificate of Analysis No.
701-1764

Company: E. ON U. S. / Trimble Co Address: Attn: Roger Medina Ed Raker Phone: 502-627-2997 502-347-4187 email: roger.medina@eon-us.com	**Microbac Information:** Template Name: BID4321	On-site contact: Diana Friebert 502-627-6204

Permit #		Frequency One Time Event	Project Reference: Permit Renewal / Tyrone	Sampler (signature):

Sample ID	Sample Description	Collected Date	Collected Time	Analysis Requested	Grab/ Comp.	No. of Cont.	Cont. Type	Preservative
	002-Cooling Tower Blowdown	1-29-7	12:15	BOD, ADMI, MBAS, SULFITE	Grab	1	P	None, <4.0 Deg C
				BROMIDE, TSS, CL, F, NO2, NO3, SO4	Grab	1	P	None, <4.0 Deg C
				NH3, PHOS-T, COD, N-T	Grab	2	P	H2SO4, pH <2
				Fecal Coliform	Grab	1	P	Sodium Thiosulfate
				OG-T	Grab	1	G	H2SO4, pH <2
				CN-T	Grab	1	P	NaOH
				SULFIDE	Grab	1	P	NaOH/Zn Acetate
				HARDNESS-T	Grab	1	P	HNO3, pH <2
				Al, Ba, B, Co, Fe, Mg, Mo, Mn, Sb, As, Be, Cd	Grab	1	P	HNO3, pH <2
				Cr, Cu, Pb, Ni, Se, Ag, Tl, Ti, Sn, & Zn-T	Grab		P	HNO3, pH <2
				TOC, PHENOL	Grab	2	G	H2SO4, pH <2
				VOLATILE ORGANICS	Grab	3	G	HCL, Ph<2
				SEMI-VOLATILE ORGANICS	Grab	2	G	None, <4.0 Deg C
				MERCURY EPA 1631	Grab	2	G	None, <4.0 Deg C

Received By: Barry Henry	Date/Time: 1-29-7 12:15	**Field Parameters:**
Relinquished By: Barry Henry	Date/Time: 1-29-7 1754	**pH:** 8.60 **Temperature:** 25c **Flow:** 1.77 **MGD**
Received at Lab By:	Date/Time: 1-29-07 1754	**Field Limits:** **Type of Flow:**

Chain of Custody Record

Microbac Laboratories, Inc.
Kentucky Testing Laboratory Division
3323 Gilmore Industrial Blvd., Louisville, KY 40213
(502) 962-6400 fax (502) 962-6411

Certificate of Analysis No.
701-1789

Company: E. ON U. S. / Trimble Co Address: Attn: Roger Medina Ed Raker Phone: 502-627-2997 502-347-4187 email: roger.medina@eon-us.com	**Microbac Information:** Template Name: BID4321	On-site contact: Diana Friebert 502-627-6204

Permit #		Frequency One Time Event	Project Reference: Permit Renewal / Tyrone	Sampler (signature):

Sample ID	Sample Description	Collected Date	Collected Time	Analysis Requested	Grab/ Comp.	No. of Cont.	Cont. Type	Preservative
	005-Plant Intake	1-29-7	11:15	BOD, ADMI, MBAS, SULFITE	Grab	1	P	None, <4.0 Deg C
				BROMIDE, TSS, CL, F, NO2, NO3, SO4	Grab	1	P	None, <4.0 Deg C
				NH3, PHOS-T, COD, N-T	Grab	2	P	H2SO4, pH <2
				Fecal Coliform	Grab	1	P	Sodium Thiosulfate
				OG-T	Grab	1	G	H2SO4, pH <2
				CN-T	Grab	1	P	NaOH
				SULFIDE	Grab	1	P	NaOH/Zn Acetate
				HARDNESS-T	Grab	1	P	HNO3, pH <2
				Al, Ba, B, Co, Fe, Mg, Mo, Mn, Sb, As, Be, Cd	Grab	1	P	HNO3, pH <2
				Cr, Cu, Pb, Ni, Se, Ag, Tl, Ti, Sn, & Zn-T	Grab		P	HNO3, pH <2
				TOC, PHENOL	Grab	2	G	H2SO4, pH <2
				VOLATILE ORGANICS	Grab	3	G	HCL, Ph<2
				SEMI-VOLATILE ORGANICS	Grab	2	G	None, <4.0 Deg C
				MERCURY EPA 1631	Grab	2	G	None, <4.0 Deg C

Received By: Barry Hanny	Date/Time: 1-29-7 11:15	**Field Parameters:**
Relinquished By: Barry Hanny	Date/Time: 1-29-7 1453	**pH:** 7.63 **Temperature:** 4.9C **Flow:** 2.29 **MGD**
Received at Lab By:	Date/Time: 1-29-07 1453	**Field Limits:** **Type of Flow:**

ERNIE FLETCHER
GOVERNOR

ENVIRONMENTAL AND PUBLIC PROTECTION CABINET
DEPARTMENT FOR ENVIRONMENTAL PROTECTION
DIVISION OF WATER
14 REILLY ROAD
FRANKFORT, KENTUCKY 40601
www.kentucky.gov

TERESA J. HILL
SECRETARY

March 9, 2007

APR 10 2007
SECOND NOTICE

Mr. John Moffett
One Quality Street
Lexington, Kentucky 40507

RE: KPDES No. KY0041971
Louisville G & E Trimble Station
Trimble County, Kentucky

Dear Mr. Moffett:

Our records indicate that your Kentucky Pollutant Discharge Elimination System (KPDES) permit is due to expire on September 30, 2007. According to the KPDES Regulation 401 KAR 5:060, "any person with a currently effective permit shall submit a new application at least 180 days before the expiration of the existing permit..." **The due date for your permit renewal application is April 12, 2007.**

Please complete the enclosed application forms and return to the KPDES Branch, Division of Water, at the above address by the indicated due date. Applications received after the due date are in violation of 401 KAR 5:060, Section 1, which could result in enforcement action being taken.

If you have any questions regarding the completion of these forms, please contact me at (502) 564-8158, extension 470, or Ann Workman at extension 528.

Sincerely,

Vickie L. Prather, Acting Supervisor
Inventory and Data Management Section
KPDES Branch
Division of Water

VLP:ASW:asw

Enclosures

C: Florence Regional Office
Division of Water Files

ERNIE FLETCHER
GOVERNOR

ENVIRONMENTAL AND PUBLIC PROTECTION CABINET
DEPARTMENT FOR ENVIRONMENTAL PROTECTION
DIVISION OF WATER
14 REILLY ROAD
FRANKFORT, KENTUCKY 40601-1190
www.kentucky.gov

TERESA J. HILL
SECRETARY

April 17, 2007

John N. Voyles, Vice President
Regulated Generation
Louisville Gas & Electric Company
P.O. Box 32010
Louisville, Kentucky 40232

Re: Complete KPDES Permit Application
KPDES No.: KY0041971
AI ID: 4054
Louisville G & E Trimble Station
Trimble County, Kentucky

Dear Mr. Voyles:

Your Kentucky Pollutant Discharge Elimination System (KPDES) permit application for the above-referenced facility was received by the Division of Water on April 11, 2007, and has been determined complete. As per 401 KAR 5:075, Section 1(7), the official effective date of your application has been determined as April 17, 2007, the date of this notice.

A technical review of your permit application will commence in the near future. Please be aware that you may be asked to provide additional information to clarify, modify, or supplement your application material. A request for this additional information will not render your application incomplete.

If you have any questions concerning this matter, please contact Larry Sowder at (502) 564-3410, extension 472.

Sincerely,

Nancy Green

Nancy Green, Program Coordinator
Inventory and Data Management Section
KPDES Branch
Division of Water

NG:ng
c: Division of Water Files

LG&E
an e·on company
220 West Main Street
Louisville, KY 40202

RECEIVED
APR 11 2007
By

April 9, 2007

Kentucky Division of Water, KPDES Branch
Inventory & Data Management Section
Frankfort Office Park
14 Reilly Road
Frankfort, KY 40601

RE: NPDES No. KY0041971 Trimble County Generating Station, Trimble County, KY

Enclosed please find a completed KPDES permit application for the reissuance of the expiring permit held by Louisville Gas & Electric Company for its Trimble County fossil-fuel fired steam electric generating station. We have included KPDES Forms 1 and C for the facility and a check, made payable to the Kentucky State Treasurer, in the amount of $640.00 for the application filing fee for the generating station (categorized as a major industry). In addition, we have attached to the following supporting documentation:

1. Copy of a USGS Topographic Map (noting the facility site and discharge points)
2. Description of Existing Pollution Abatement Facilities
3. Stormwater Runoff Calculations
4. Stormwater Runoff Diagram
5. Water Balance Diagram (30-Day Peak Monthly Process and 1-Day Maximum Conditions)
6. Water Balance Diagram (30-Day Peak Monthly Process and Average Rainfall Conditions)
7. Sample results for the priority pollutant analysis required for Form C from the contracted commercial laboratory.

As directed, we have incorporated planned changes in plant operations corresponding to the construction of Unit 2, a gypsum storage basin and the elevation of the berms of the existing combined ash storage basin. The new Unit 2 will commence operation in 2010 and consist of a coal-fired, supercritical operating-pressure boiler outfitted with SCR, Dry ESP, activated-carbon injection, baghouse, FGD and Wet ESP systems. The construction of the gypsum storage basin and elevation of the berms of the existing combined ash basin is expected to allow operation of these facilities by 2010. A clay liner will be incorporated into the construction of the basin and berms elevation which is consistent with the existing site ash basin.

The flows associated with these facilities have been projected according to current construction plans; as requested, we will notify the KPDES branch to discuss if any changes are considered and whether they might impact the KPDES permit and/our permitted discharge limits.

If I may be of assistance or you have any questions concerning the attached information, please feel free to contact me at (502) 627-2997.

Sincerely,

Roger J. Medina

Roger J. Medina
Sr. Chemical Engineer, Environmental Affairs

Enclosures